MANTION

Sliding Systems for Glass Doors and Wooden Doors

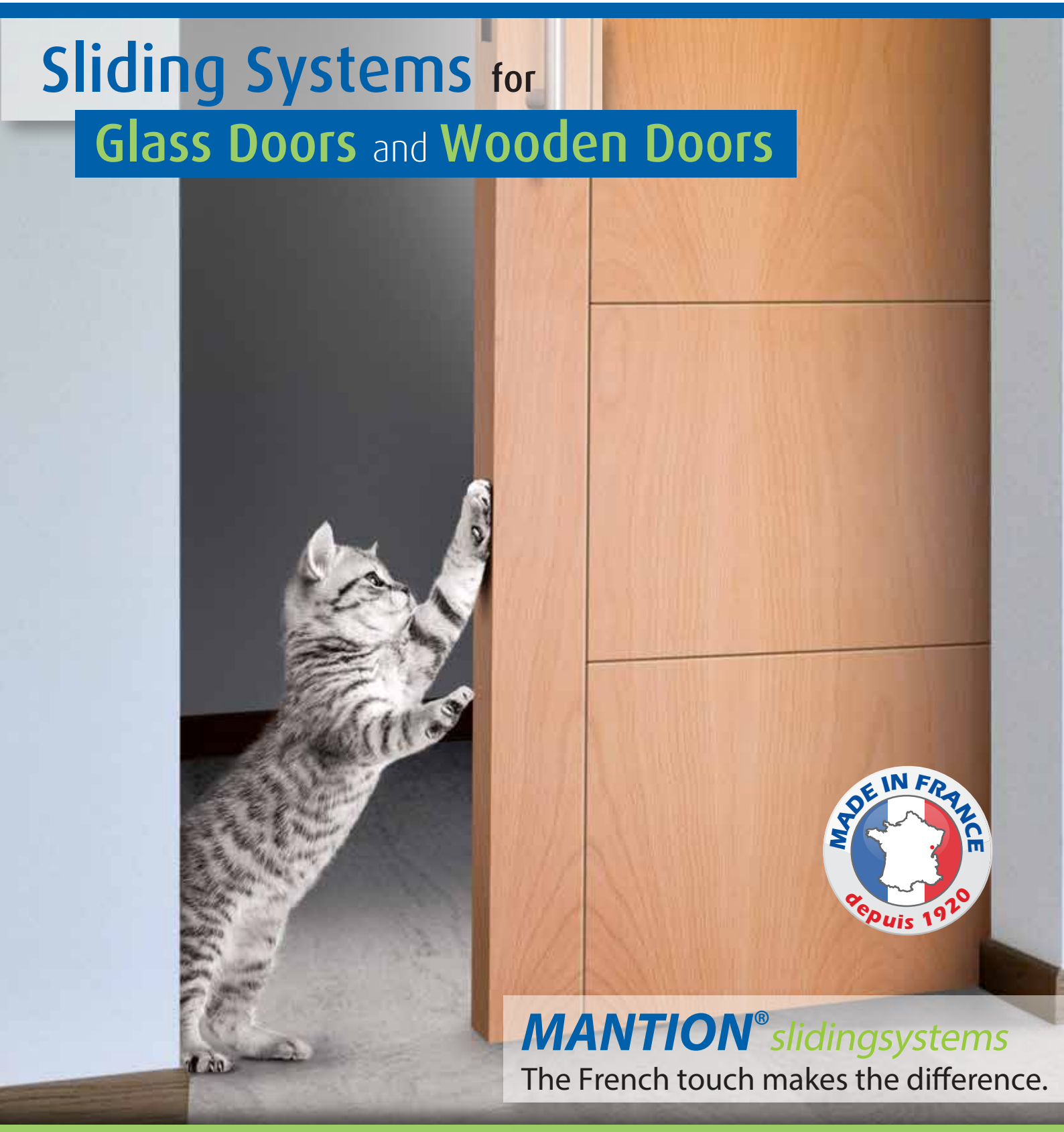

MANTION® *slidingsystems*

The French touch makes the difference.

MANTION
SLIDING SYSTEMS

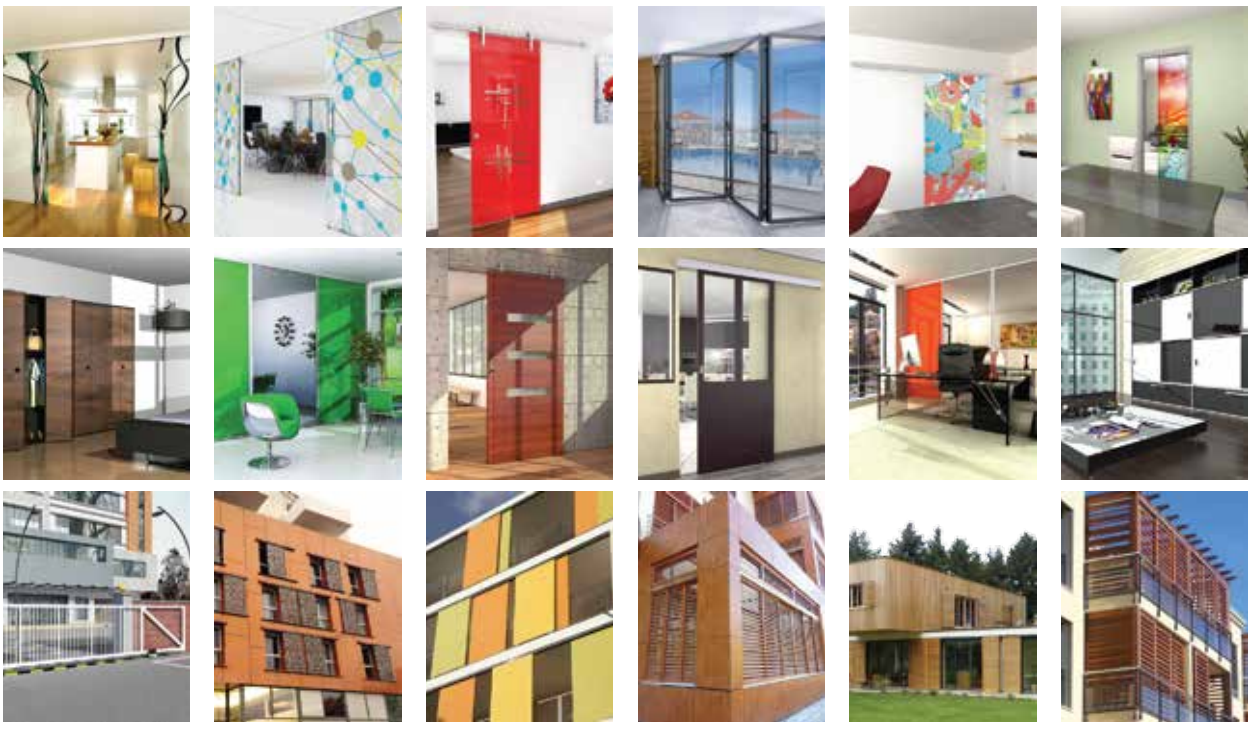

AUB

Content

STRAIGHT SLIDING DOORS for glass door

P.3 MAGLASS PINCE 80
P.5 SAFGLASS PINCE 120
P.7 SAFGLASS PINCE SYNCHRO
P.9 INTEC-fixed on the wall
P.11 INTEC- ceiling-mounted installation with fixed glass partition

STRAIGHT SLIDING DOORS for glass & wooden door

P.13 TUB-DESIGN 80G

STRAIGHT SLIDING DOORS for wooden door

P.15 SAF 120A
P.17 SAF 80/120 TELESCOPIC
P.19 STARAL PLUS

AUTOMATIC

P.21 SOFTCLOSE-GLASS

FOLDING DOOR

P.23 TANGO

FOLDING DOOR for Picture Windows

P.25 OPENTEC F80
P.27 OPENTEC FWF 100
P.29 OPENTEC FMF 150

Straight sliding system for glass doors

MAGLASS PINCE 80

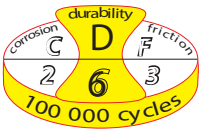

CAPACITY/DOOR	80 KG
DOOR THICKNESS	8 - 10 - 12 MM
TRACK	ALUMINIUM
MOVEMENT	STRAIGHT

TRACK

Item Nr.	Description
11145/...	Raw aluminium track, 32.1 x 26.4 mm cross-section drilled every 0.44 m, in lengths of 4 or 6 m.

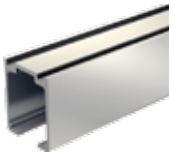

11145/...

GEAR MAGLASS PINCE 80

GE4201	Gear for one 8/10/12 mm door including: - 2 mountings with precision bearings - 2 anodised aluminium clamps - Sets of shims for 8, 10 or 12 mm doors - 2 hydraulic door closer end stops - 1 adjustable lower guide made of transparent polycarbonate - Tools and installation instructions

Gear MAGLASS PINCE 80

For the best possible smoothness of travel, choose the synchronised fitting according to the weight of the door:

How to calculate the weight of a glass door:

W = 2.5 X thickness of door (in mm) X surface area of door (in m^2)

GEAR FOR MAGLASS PINCE 80 SYNCHRONISED FOR DOUBLE DOOR (2.2 M OPENING MAX.)

W* < 60 KG	60 KG < W * < 100 KG	100 KG < W * < 140 KG	140 KG < W * < 160 KG
GE5001	GE5002	GE5003	GE5004

Gear for two 8/10/12 mm doors including:
- 4 mountings with precision bearings
- 4 anodised aluminium clamps (incl. sets of shims for 8, 10 or 12 mm doors)
- 2 end stops
- 2 return pulleys
- 1 cable 1.5 mm Ø 10 m long
- Fasteners on clamps
- 2 adjustable lower guides made of transparent polycarbonate
- Tools and installation instructions

* W = total weight of both glass doors

Gear MAGLASS PINCE 80 SYNCHRONISED

ACCESSORIES

Item Nr.	Description
M66	Damper closer system for gentle closing of doors (over 100 mm) Damper automatically follows door to its closed position.
2529	Reinforced angle plate for wall-fixing of the track, supplied with screws, nut and washer. Height = 23 mm - Length = 30 mm - Thickness 30/10.

2529

M66

Straight sliding system for 8, 10 or 12 mm glass doors, up to 80 Kg

- Clamp is suitable for Securit glass and does not require any drilling of the glass panel.
- Convenience ensured thanks to the SAFSTOP system (hydraulic end stop), allowing you to stop the door in an open or closed position.

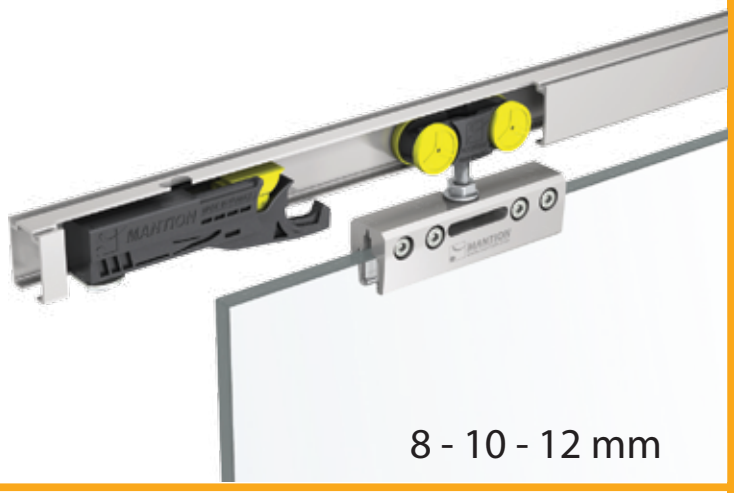

MAGLASS PINCE 80 ®

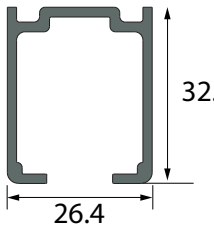

Track 11145/...
(4 - 6 m)

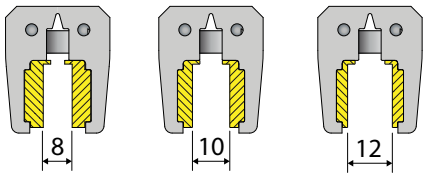

Clamps supplied with 3 sets of shims for 8, 10 or 12 mm doors

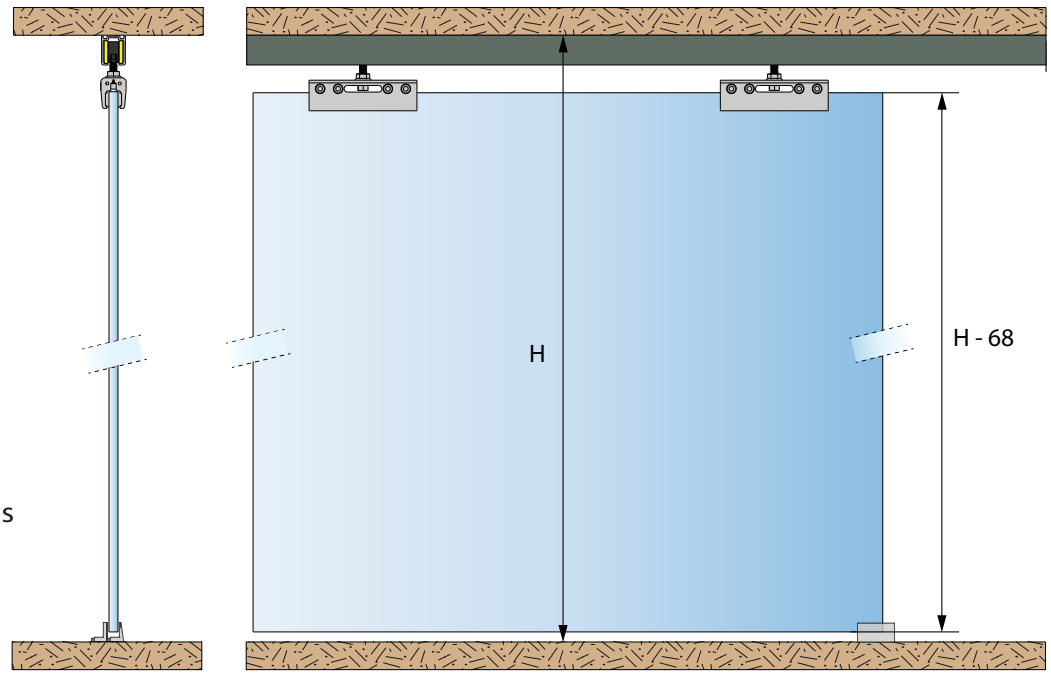

H = opening

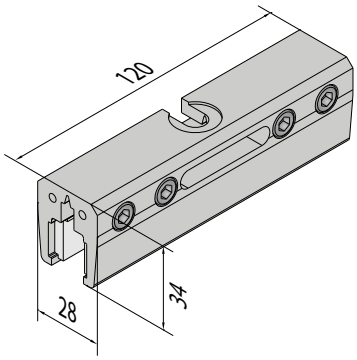

CLEVER:
Rollers equipped with a ball joint that improves the robustness of the system and adjusts to any mounting location defects

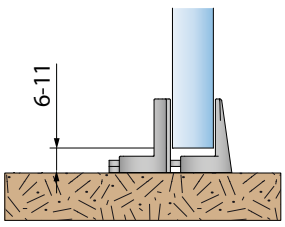

Mounting with guide 1124

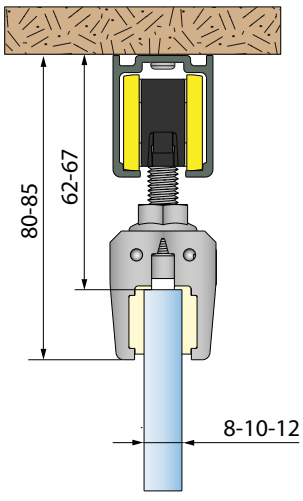

Fixing on the ceiling

Straight sliding Systems for glass doors / 12-15 mm

SAFGLASS PINCE 120

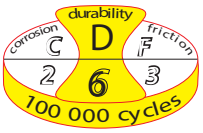

CAPACITY/DOOR	120 KG
DOOR THICKNESS	12 - 15 MM
TRACK	ALUMINIUM
MOVEMENT	STRAIGHT

TRACKS & PELMETS

Item Nr.	Description
11312/...	Anodised aluminium track, 37.4 x 28 mm cross-section drilled every 0.3 m, in lengths of 2 / 3 / 5 or 6m
11013	Angled (sliding) bracket for wall mounting of track. Fastened every 0.3 m.
11031/...	Snap-on anodised aluminium pelmet* To be used for ceiling mounting. Height = 67 mm - Length = 2 or 3m
11041/...	Snap-on anodised aluminium pelmet* To be used for wall mounting. Height = 86 mm - Length = 2 / 3 / 4 or 6m.
11045	Set of painted aluminium end pieces for 11041/... pelmets *RAL5803

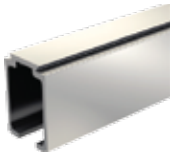

11312/...

11013

11031/...*

11041/...*

11045

* Pelmets and end pieces are available in raw aluminium (to be painted) or painted on request in your choice of RAL colour

GEAR FOR SAFGLASS PINCE 120

GA4204	Gear for one 12 mm door including: - 2 rollers with precision bearings + installation template (STAINLESS screws, bolts and bearings) - 2 anodised aluminium clamps - 2 claw stops - 1 stainless steel lower guide - 1 spirit level for the track adjustment (buly) - 2 cleaning wipes for the degreasing of the glass before clamp fitting - Installation instructions
GA4205	Ditto for 1 door 15 mm thick (without lower guide)

Gear SAFGLASS PINCE 120

CLAMP COVERING* (only covers clamp)

GA4120	Aluminium covering for 12 mm clamp consisting of 4 clamp pelmets and 4 end pieces. Length of clamp pelmets= 194 mm
GA4420	Aluminium covering for 15 mm clamp consisting of 4 clamp pelmets and 4 end pieces. Length of clamp pelmets= 194 mm

LONG CLAMP COVERING* (covers entire width of door)

GA4121	Aluminium covering for 12 mm clamp consisting of 2 clamp pelmets and 2 end pieces. Length of clamp pelmets= 1.5 m (cut to length)
GA4123	Aluminium covering for 12 mm clamp consisting of 2 clamp pelmets and 2 end pieces. Length of clamp pelmets= 3 m (cut to length)
GA4421	Aluminium covering for 15 mm clamp consisting of 2 clamp pelmets and 2 end pieces. Length of clamp pelmets= 1.5 m (cut to length)
GA4423	Aluminium covering for 15 mm clamp consisting of 2 clamp pelmets and 2 end pieces. Length of clamp pelmets= 3 m (cut to length)

* Coverings are made of anodised aluminium. They are available in raw aluminium (to be painted) or painted on request in your choice of RAL colour

Note: Clamp pelmets are optional

Long clamp covering

Clamp covering

Clamp covering:

pelmet end pieces + clamp pelmets

Straight sliding Systems for glass doors of 12 or 15 mm thickness, combining refined design with smooth rolling.

- Thanks to the clamp, there is no need to drill the glass in any way.
- Confortable: the damper closer system M66 for gentle closing of doors (automatically follows door to its closed position over 100 mm); and hydraulic closer stop allows doors to open softly.
- Practical: the clamp can be mounted with or without pelmet (no drilling on the visible side).
- Clever: Rollers equipped with a ball joint that improves the robustness of the system and adjusts to any mounting location defects.

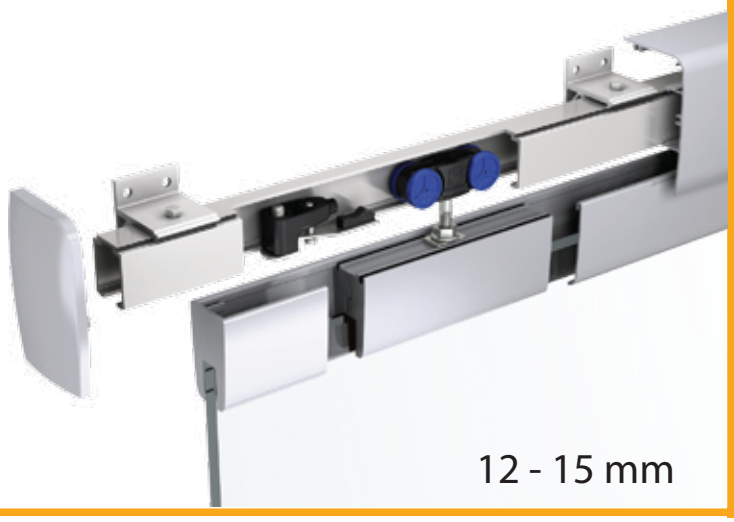

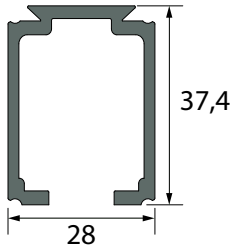

Track 11312/...
(2 - 3 - 5 - 6 m)

The clamp can be mounted with or without pelmet
(no drilling on visible side)

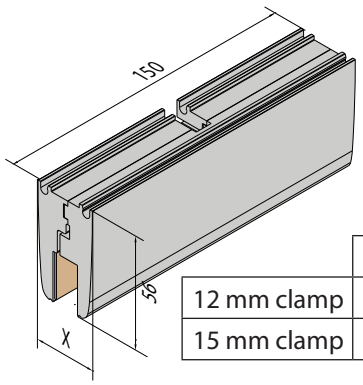

	X
12 mm clamp	31 mm
15 mm clamp	34 mm

CLEVER:

Rollers equipped with a ball joint that improves the robustness of the system and adjusts to any mounting location defects

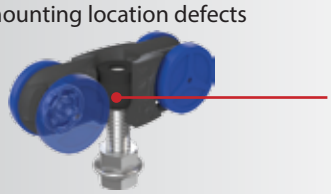

SAFGLASS PINCE 120®

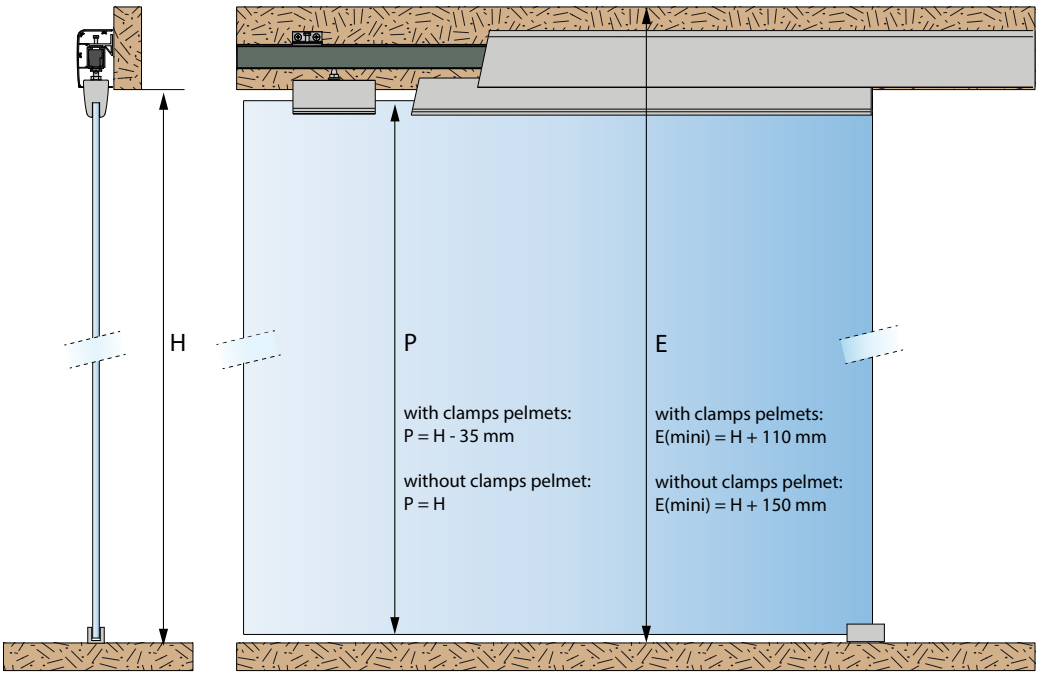

H = opening P = door E = space-saving

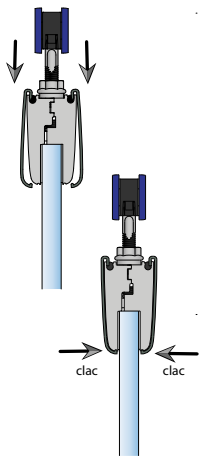

Mounting of clamps covering simple and fast

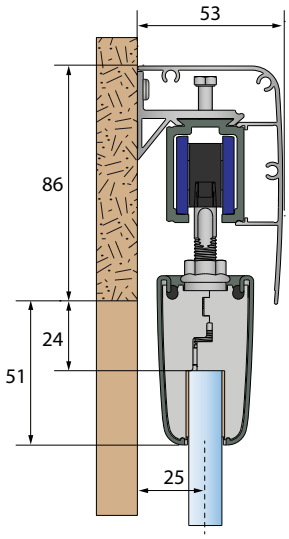

Fixing on the wall

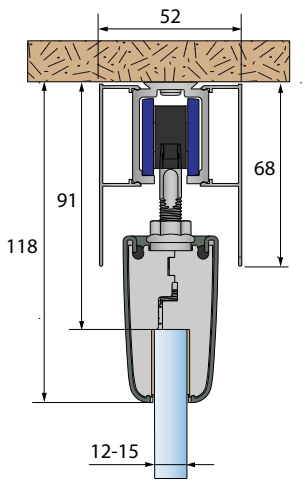

Fixing on the ceiling

Synchronised straight sliding system for double glass door / 8-10-12 mm

SAFGLASS SYNCHRO

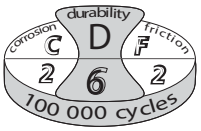

CAPACITY/DOOR	80 KG
DOOR THICKNESS	8 - 10 - 12 MM
TRACK	ALUMINIUM
MOVEMENT	STRAIGHT

TRACKS & PELMETS

Item Nr.	Description
11108/...	Anodised aluminium track, 33 x 27 mm cross-section drilled every 0.44 m, in lengths of 2 / 2.5 / 3 / 4 / 5 or 6 m.
11011/...	Snap-on anodised aluminium pelmet*. To be used for ceiling mounting. Height = 63 mm - Length = 2 / 4 or 6 m.
11041/...	Snap-on anodised aluminium pelmet*. To be used for wall mounting. Height = 86 mm - Length = 2 / 3 / 4 or 6 m.
11045	Set of painted aluminium end pieces for 11041/... pelmets * RAL5803

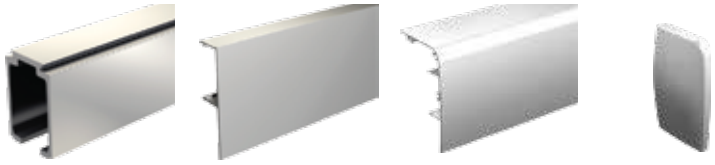

* Pelmets and end pieces are available in raw aluminium (to be painted) or painted on request in your choice of RAL colour

See clamps covering p. 8 and 10

GEAR FOR SAFGLASS PINCE 80 SYNCHRONISED - 8 MM FOR DOUBLE DOOR (2.2 M OPENING MAX.)

GA5071	Gear for two 8 mm doors including: - 4 rollers with precision bearings and 4 aluminium clamps - 2 end stops 11213N - 2 damper closer systems M66 - 1 cable 1.5mm Ø 10m long - 1 translucent adhesive seal to be fitted on door edge to dampen closure. L = 3 m. - Fasteners on short clamps - 2 lower guides in stainless steel - 1 spirit level for the track adjustment (buly) - 4 cleaning wipes for the degreasing of the glass before clamp fitting - Tools and installation instructions

GEAR FOR SAFGLASS PINCE 80 SYNCHRONISED - 10 MM FOR DOUBLE DOOR (2.2 M OPENING MAX.)

GA5072	Gear for two 10 mm doors including: - 4 rollers with precision bearings and 4 aluminium clamps - 2 end stops 11213N - 2 damper closer systems M66 - 1 cable 1.5 mm Ø 10 m long - 1 translucent adhesive seal to be fitted on door edge to dampen closure. L = 3 m. - Fasteners on short clamps - 2 lower guides in stainless steel - 1 spirit level for the track adjustment (buly) - 4 cleaning wipes for the degreasing of the glass before clamp fitting - Tools and installation instructions

GEAR FOR SAFGLASS PINCE 80 SYNCHRONISED - 12 MM FOR DOUBLE DOOR (2.2 M OPENING MAX.)

GA5073	Gear for two 12 mm doors including: - 4 rollers with precision bearings and 4 aluminium clamps - 2 end stops 11213N - 2 damper closer systems M66 - 1 cable 1.5 mm Ø 10 m long - 1 translucent adhesive seal to be fitted on door edge to dampen closure. L = 3 m. - Fasteners on short clamps - 2 lower guides in stainless steel - 1 spirit level for the track adjustment (buly) - 4 cleaning wipes for the degreasing of the glass before clamp fitting - Tools and installation instructions

GEARSAFGLASS SYNCHRO

The choice of synchronisation system is based on the thickness of the glass.

Synchronised straight sliding system for double glass door of 8 - 10 or 12 mm thickness, combining refined design with smooth rolling.

- The choice of synchronisation system is based on the thickness of the glass and on the weight of the doors.
- Thanks to the clamp, there is no need to drill the glass in any way.
- Practical: the clamp can be mounted with or without pelmet (no drilling on the visible side).
- Clever: Rollers equipped with a ball joint that improves the robustness of the system and adjusts to any mounting location defects.

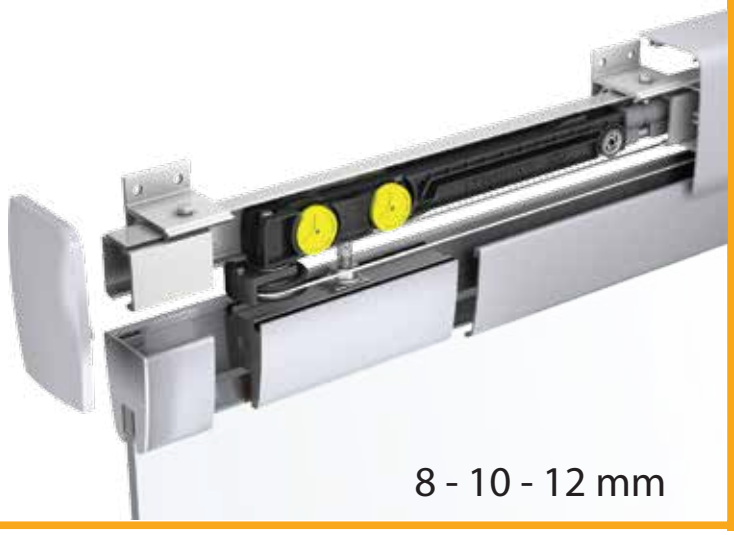

SAFGLASS SYNCHRO®

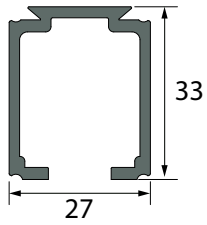

Track 11108/...
(2 - 2.5 - 3 - 4 - 5 - 6 m)

The clamp can be mounted with or without pelmet
(no drilling on visible side)

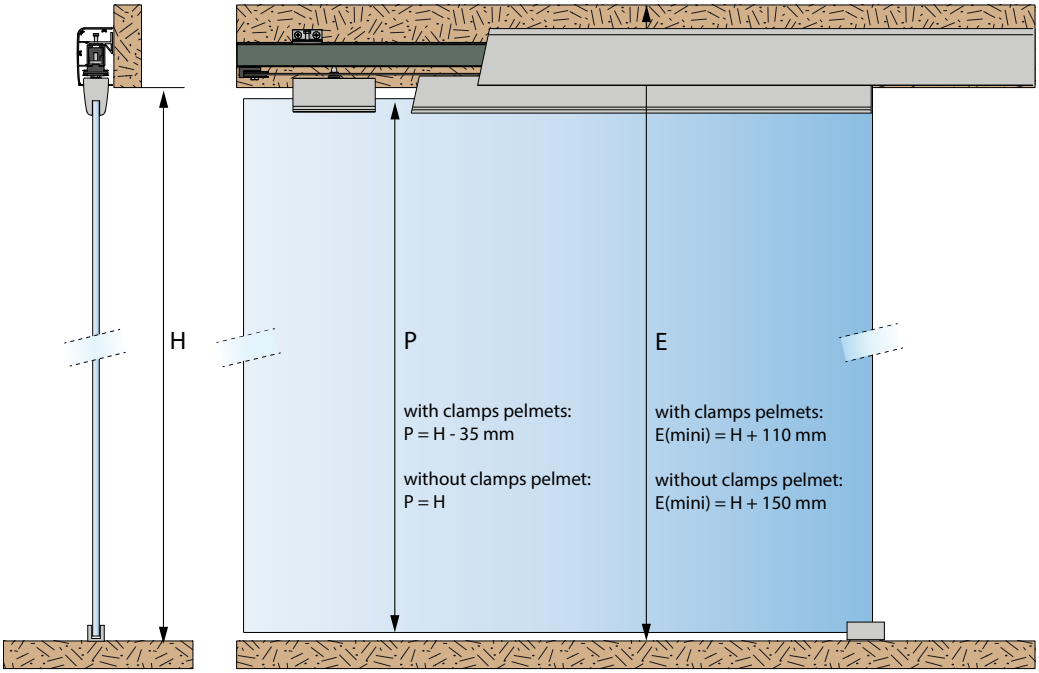

H = opening P = door E = space-saving

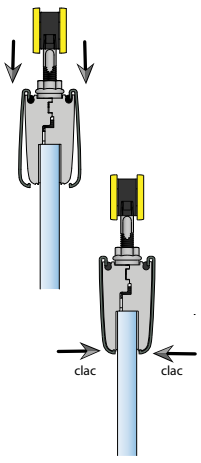

Mounting of clamps covering simple and fast

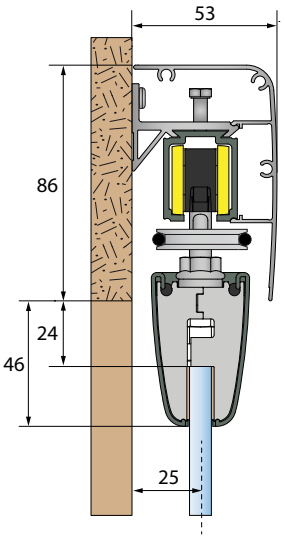

Fixing on the wall

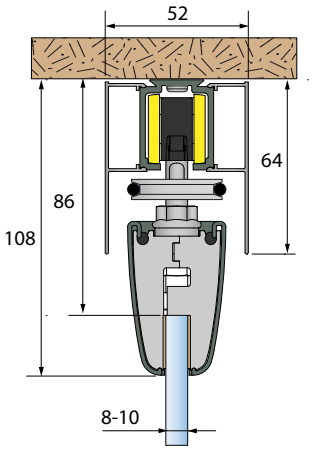

Fixing on the ceiling

CLEVER:

Rollers equipped with a ball joint that improves the robustness of the system and adjusts to any mounting location defects

Straight sliding system for glass door / Fixing on the wall

INTEC

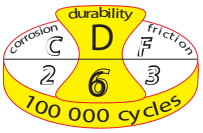

CAPACITY/DOOR	80 KG
DOOR THICKNESS	8 - 10 MM
TRACK	ALUMINIUM
MOVEMENT	STRAIGHT

READY-TO-INSTALL SET - 1 LEAF - THICKNESS 8 AND 10 MM

Set includes:
- 1 anodised aluminium track with wall mounting holes - cut to length
- 1 anodised aluminium track pelmet - cut to length
- 1 roller kit with clamps and damper
- 2 end stops
- 2 anodised aluminium end caps
- 2 fastening clips for pelmet
- 1 lower guide
- Installation instructions and tools

Item Nr.	Description
GB0100	For opening of 0.73 m to 0.83 m
GB0101	For opening of 0.83 m to 0.93 m
GB0102	For opening of 0.93 m to 1.13 m
GB0103	For opening of 1.13 m to 1.33 m

READY-TO-INSTALL SET - 2 LEAVES - THICKNESS 8 AND 10 MM

Set includes:
- 1 anodised aluminium track with wall mounting holes - cut to length
- 1 anodised aluminium track pelmet - cut to length
- 2 roller kits with clamps and dampers
- 4 end stops
- 2 anodised aluminium end caps
- 3 fastening clips for pelmet
- 2 lower guides and 1 translucent adhesive seal for door edge
- Installation instructions and tools

Item Nr.	Description
GB0111	For opening of 1.53 m to 1.73 m
GB0113	For opening of 1.73 m to 1.93 m
GB0115	For opening of 1.93 m to 2.13 m
GB0117	For opening of 2.13 m to 2.33 m
GB0119	For opening of 2.33 m to 2.53 m

READY-TO-INSTALL SET - 2 SYNCHRONISED LEAVES THICKNESS 8 AND 10 MM

Set includes:
- 1 anodised aluminium track with wall mounting holes - cut to length
- 1 anodised aluminium track pelmet - cut to length
- 2 roller kits with clamps and dampers s
- 1 cable-operated synchronisation kit
- 4 end stops
- 2 anodised aluminium end caps
- 3 fastening clips for pelmet
- 2 lower guides and 1 translucent adhesive seal for door edge
- Installation instructions and tools

Item Nr.	Description
GB0110	For opening of 1.33 m to 1.53 m
GB0112	For opening of 1.53 m to 1.73 m
GB0114	For opening of 1.73 m to 1.93 m
GB0116	For opening of 1.93 m to 2.13 m
GB0118	For opening of 2.13 m to 2.33 m
GB0120	For opening of 2.33 m to 2.53 m

SET CONTENTS

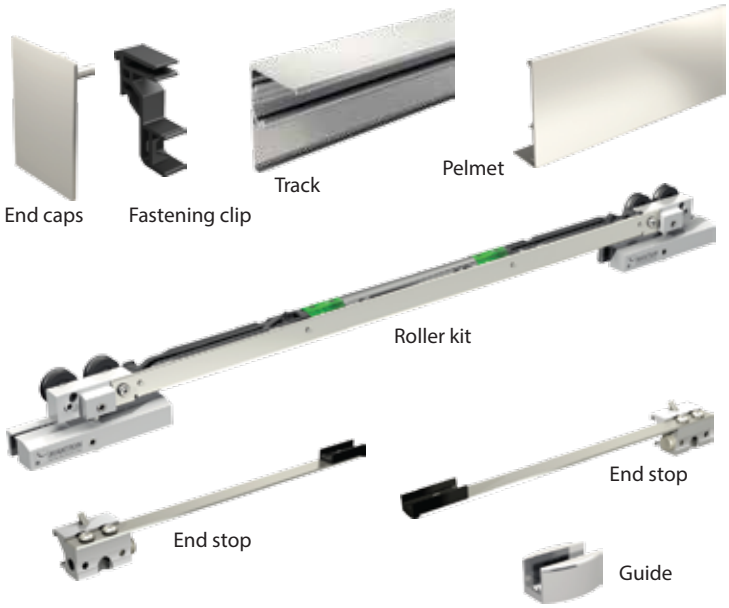

SYNCHRONISATION KIT

Fixing on the wall

Straight sliding system for single or double panels of 8 or 10 mm thickness. The clamps are integrated in the track for invisible fittings.

- Practice: 1 set for both panels thickness
- The smallest door/wall clearance on the market: from 7 to 18 mm (adjustable)
- Quick and easy installation: one-piece hanger/damper kit
- Integrated door closing damper (closing and opening)
- Wall-mounted installation

INTEC

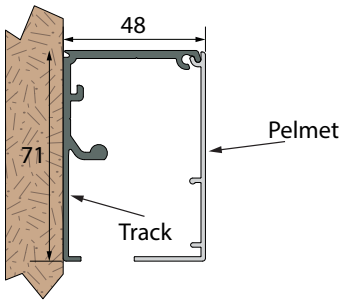

Wall-mounted Track + pelmet

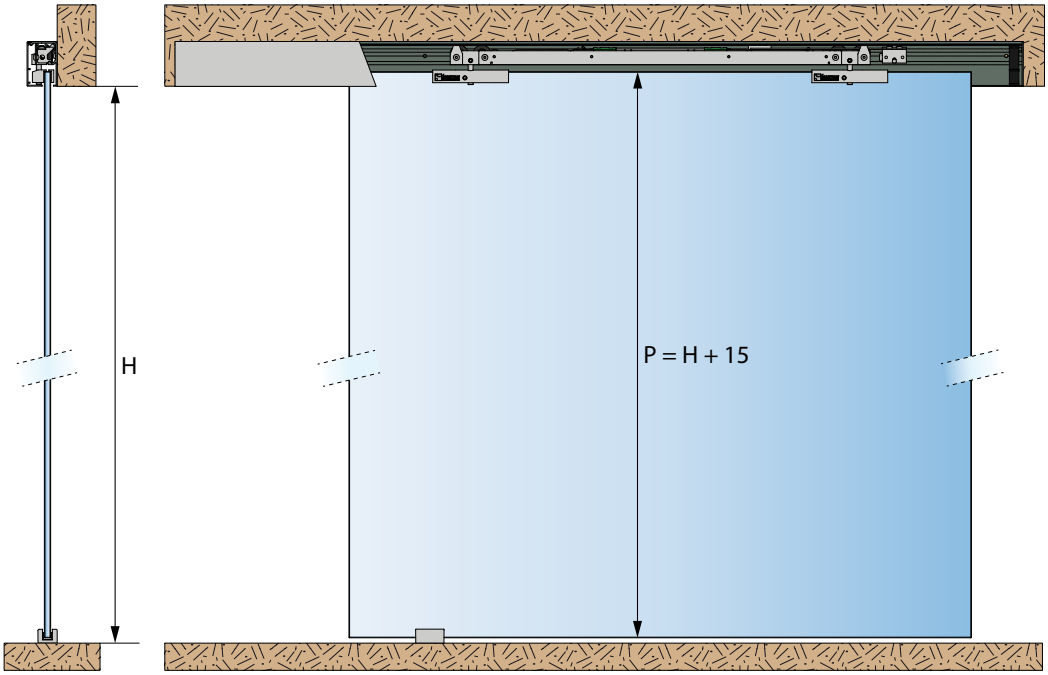

H = opening P = door

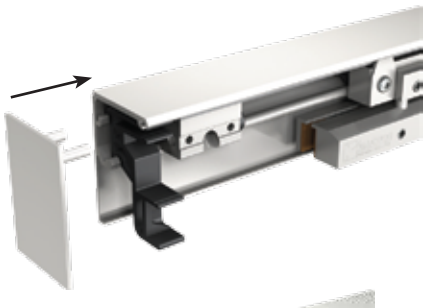

Easy mounting of the pelmet

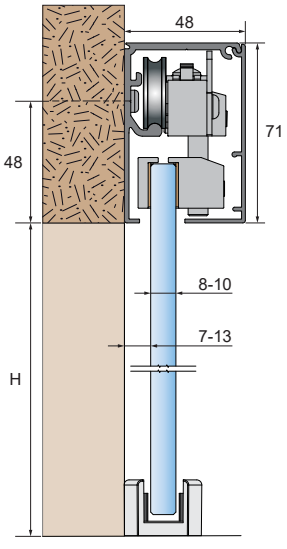

Fixing on the wall

Adjustment of the clamp:

Quick, easy, and precise worm drive adjustment system

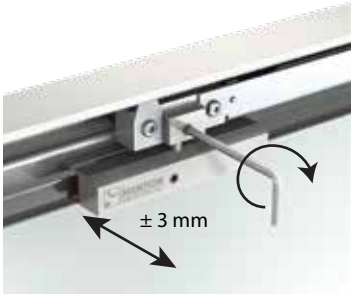

Lateral adjustment

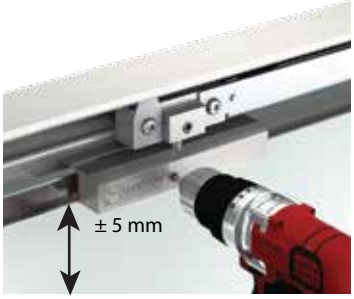

Height adjustment

Straight sliding system for glass door / Ceiling-mounted installation with fixed glass partition

INTEC

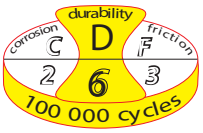

CAPACITY/DOOR	80 KG
DOOR THICKNESS	8 - 10 MM
TRACK	ALUMINIUM
MOVEMENT	STRAIGHT

TRACKS AND PELMET - ITEMS AVAILABLE BY PIECE

Item Nr.	Description
GB6010	Anodised aluminium track. Length = 6 m*
GB5015	Drilling jig for track GB6010.
GB6310	Anodised aluminium Profile for installation of the fixed glass panel. To be screwed on the track - Length = 6 m*
GB6000	Anodised aluminium pelmet to be clipped on the track. Length = 6 m*
GB6320	Anodised aluminium Profile to hide the fixed partition in the opening bay . Length = 3 m*
GB6331	Anodised aluminium U-Profile to be screwed into floor and wall to retain the fixed glass partition - Length = 3 m*
GB6330	Anodised aluminium U-Profile to be screwed into floor and wall to retain the fixed glass partition - Length = 6 m*
GB5350	Grey seal for glass, lengths upon request.
GB5351	Translucent adhesive seal for sticking on the edge of the glass panel Length = 3 m
GB3000	Set of anodised aluminium end caps.
GB3300	Set of anodised aluminium end caps with fixed glass partition.
GB5355	Stainless steel end caps for U-Profile Suitable for references GB6330 and GB6331 .

GB5015

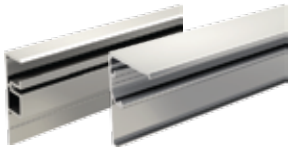

GB6310* + GB6010*

GB6000*

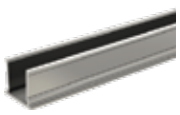

GB6320*

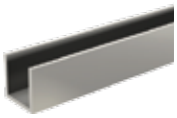

GB6331* / GB6330*

GB5350

GB5351

GB3000

GB3300

GB5355

* special length on request

GEAR FOR 1 LEAF -THICKNESS 8 AND 10 MM

GB5000	Hardware for opening of 0.73 m to 0.83 m including: - 1 roller kit with clamps and damper - 2 end stops - 2 fastening clips for pelmet - 1 lower guide - Installation instructions and tools
GB5001	Hardware for opening of 0.83 m to 1.33 m including: - 1 roller kit with clamps and damper - 2 end stops - 2 fastening clips for pelmet - 1 lower guide - Installation instructions and tools

GEAR FOR 2 SYNCHRONISED LEAVES -THICKNESS 8 AND 10 MM

GB5002	Hardware for opening of 1.33 m to 1.53 m including: - 2 roller kits with clamps and dampers - 1 cable-operated synchronisation kit - 4 end stops - 3 fastening clips for pelmet - 2 lower guides and 1 translucent adhesive seal for door edge - Installation instructions and tools
GB5003	Hardware for opening of 1.53 m to 1.73 m including: - 2 roller kits with clamps and dampers - 1 cable-operated synchronisation kit - 4 end stops - 3 fastening clips for pelmet - 2 lower guides and 1 translucent adhesive seal for door edge - Installation instructions and tools
GB5004	Hardware for opening of 1.73 m to 2.53 m including: - 2 roller kits with clamps and dampers - 1 cable-operated synchronisation kit - 4 end stops - 3 fastening clips for pelmet - 2 lower guides and 1 translucent adhesive seal for door edge - Installation instructions and tools

GEAR CONTENTS

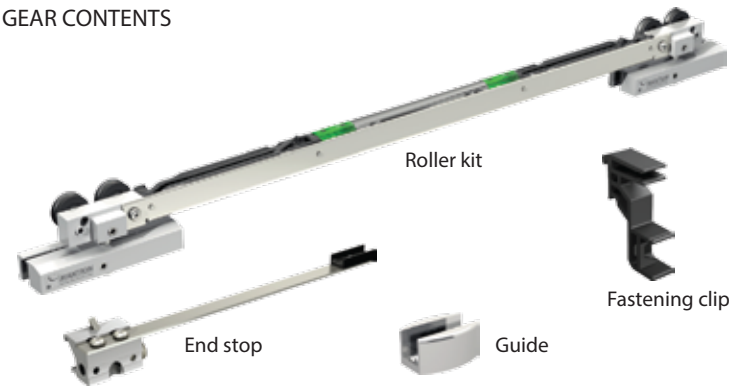

Roller kit

Fastening clip

End stop

Guide

SYNCHRONISATION KIT

Straight sliding system for single or double panels of 8 or 10 mm thickness. The clamps are integrated in the track for invisible fittings.

- Practice: 1 set for both panels thickness
- The smallest door/wall clearance on the market: from 7 to 18 mm (adjustable)
- Quick and easy installation: one-piece hanger/damper kit
- Integrated door closing damper (closing and opening)
- Ceiling-mounted installation with fixed glass partition

Ceiling-mounted installation with fixed glass partition

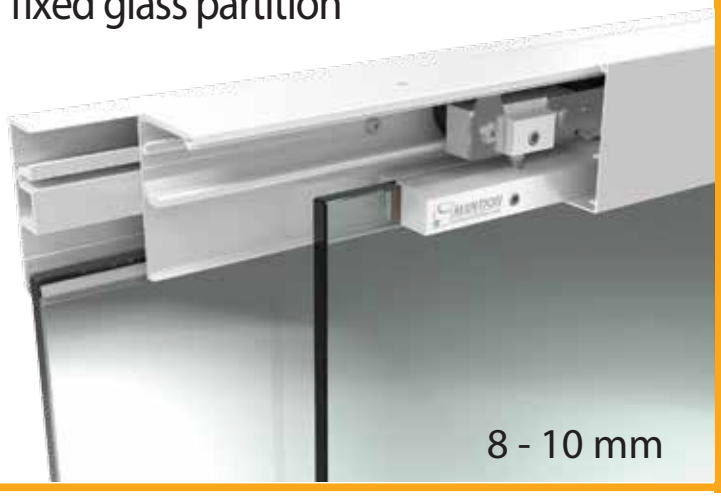

INTEC

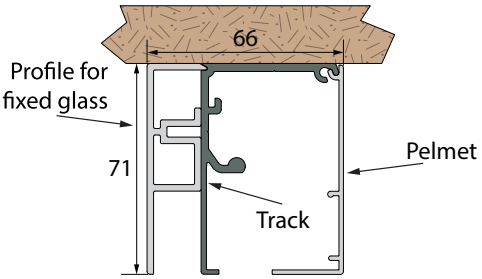

Ceiling-mounted track with profile for the fixed glass

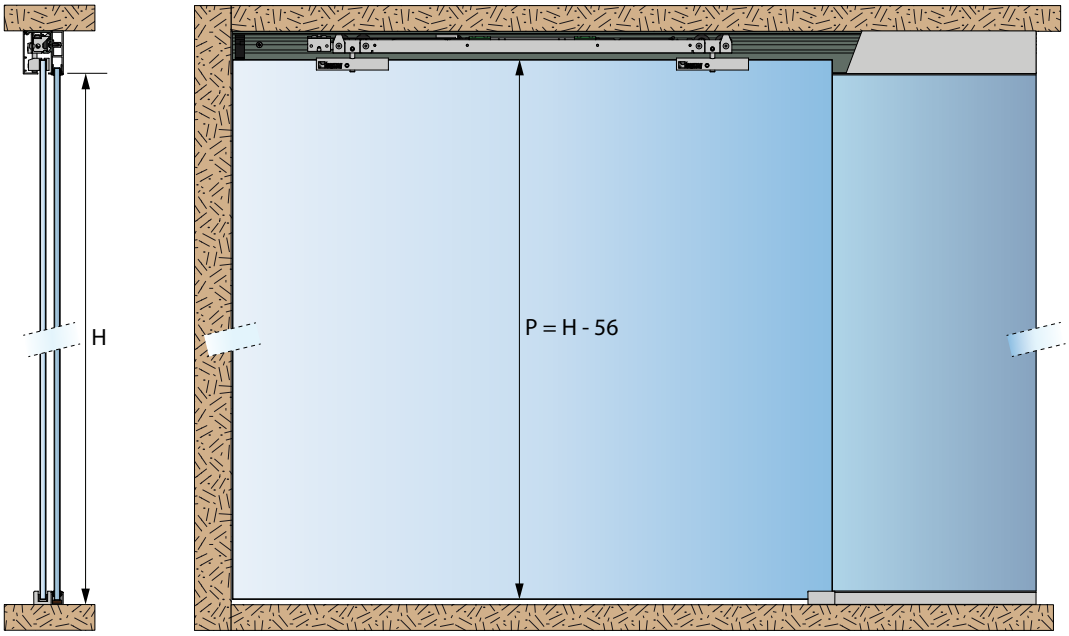

H = opening P = door

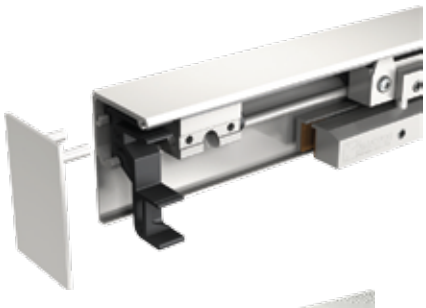

Easy mounting of the pelmet

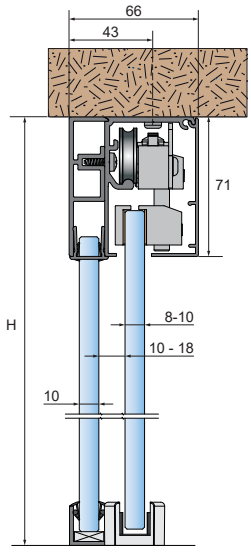

Fixing on the ceiling with fixed glass

Adjustment of the clamp:

Quick, easy, and precise worm drive adjustment system

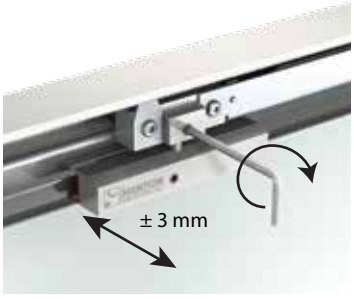

Lateral adjustment

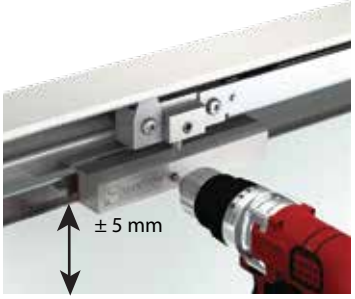

Height adjustment

Stainless steel sliding system on round track

TUB-DESIGN 80 G

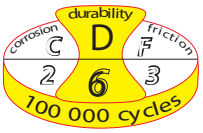

CAPACITY/DOOR	80 KG
DOOR THICKNESS	10 - 12 MM
TRACK	STAINLESS STEEL (304L)
MOVEMENT	STRAIGHT

READY-TO-INSTALL SET - 1 LEAF - THICKNESS 10 AND 12 MM

Item Nr.	Description
GF1102	Set includes: - 1 stainless steel track 2 m long - 2 stainless steel track end caps - 2 stainless steel fittings with nylon tread - 5 stainless steel track brackets for wall mounting - 2 stainless steel end stops - 1 stainless steel lower guide - Installation instructions and tools

Roller

Wall mount

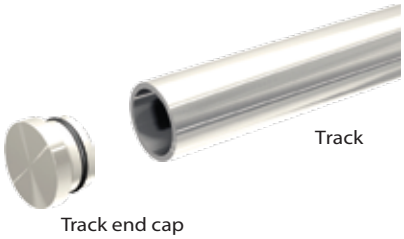
Track

Track end cap

Guide

Left end stop

Right end stop

ACCESSORIES

GF6000	Bottom right hand side brake end stop. Suitable for 8 - 10 et 12 mm panel thickness.
GF6001	Ditto for left handle side.

GF6001

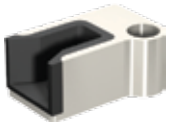
GF6000

Also available for wood doors!

TUB-DESIGN 80 W

- For wood doors up to 80 KG
- Doors thickness: from 25 to 50 mm
- Door width: from 730 to 1080 mm
- Complete ready-to-install set

Stainless steel sliding system on round track.

- Design system with apparent mecanism (drilled glass)
- Suitable for glass doors up to 80 Kg and 10 or 12 mm thickness
- Ready-to-install set with a track of 2 m length: for door width from 600 to 1040 mm

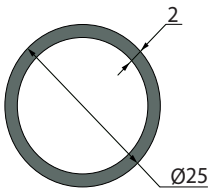

Track TUB-DESIGN 80 G
(2 m)

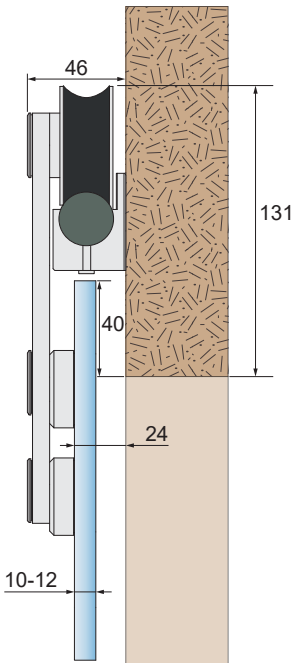

Fixing on the wall

TUB-DESIGN 80 G®

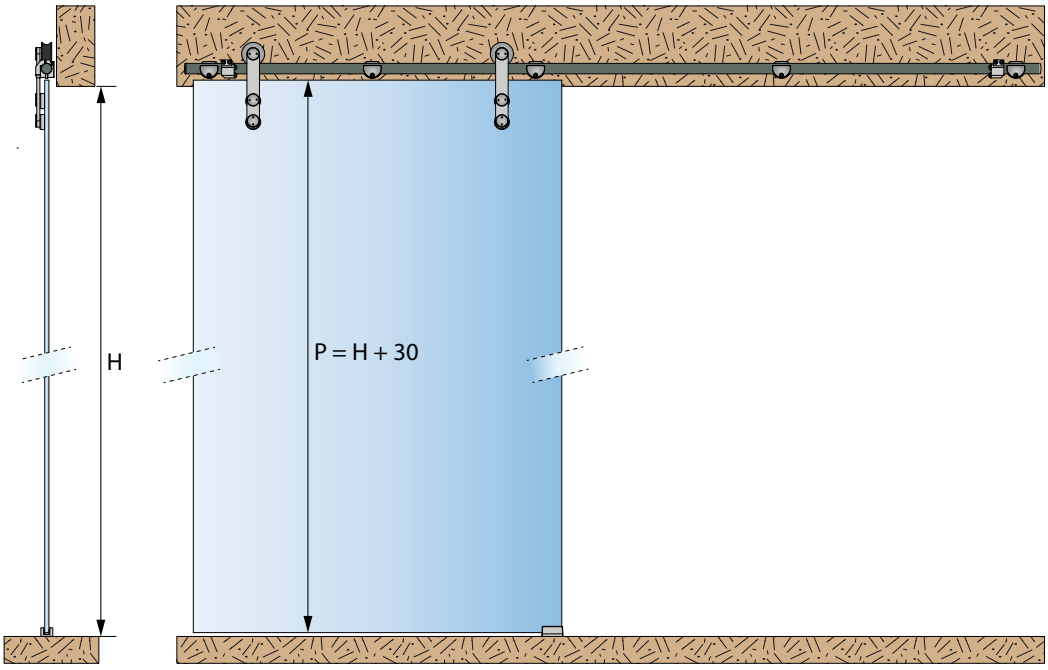

H = opening P = door

Straight sliding system for wooden doors

SAF 120A

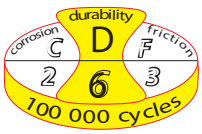

CAPACITY/DOOR	120 KG
TRACK	ALUMINIUM
MOVEMENT	STRAIGHT

SETS

Item Nr.	Description	
SAF 120A-200	Complete set for 120 Kg doors comprising: - 1 gear SAF 120A - 7 sliding angle plates 11013 - 1 track 11312 in 2 m. length + Buly (spirit level)	8
SAF 120A-300	Ditto with 10 angle supports and 1 track of 3 m . length	8

TRACKS & PELMETS

11312/200	Alu-anodized track, 37.4 x 28 mm, drilled every 0.30 m. Length: 2 m.	6
11312/300	Ditto. Length: 3 m.	6
11031/200	Alu-anodized pelmet* to be clipped on the track. For soffit fixing Height: 67 mm - Length: 2 m .	6
11031/300	Ditto. Length: 3 m.	6
11041/200	Alu-anodized pelmet* to be clipped on the track. For wall fixing Height: 86 mm - Length: 2 m	6
11041/300	Ditto. Length: 3 m.	6
11041/400	Ditto. Length: 4 m.	6
11045	Set of painted aluminium end caps* for pelmet 11041	
11013	Sliding angle plate for wall fixing of the track (every 0.44 m.)	8

GEARS

SAF 120A	Gear for 120 Kg doors comprising: - 2 rollers SAF120A (with ball bearings and polyamide wheels) - 2 plates 10036 - 2 adjustable stops 11213 - 1 guide 1103R	6
SAF 121A	Ditto SAF 120A with 2 plates 11036 (instead of plates 10036)	6

ACCESSORIES

1106/110	Black PVC U-profile, 12x18, to be flush-mounted under the door. Improves door sliding performance. Suitable for 1103 and 1103 R guides. Length:1.10 m.	
1109A/200	Aluminium U-PROFILE, 25x18 mm - 2 m. long	
1109A/300	Ditto. Length: 3 m.	
1109A/500	Ditto. Length: 5 m.	
1102	Plate with an olive guide, screwing type. For U-PROFILE 25x18 mm (1109A).	
1086	Reinforced end stop with rubber buffer	

SET SAF 120A

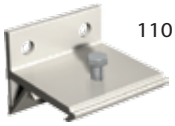
11013

11312

11213

10036
for front-mounted doors

Buly

11045*

11041*/...

11031*/...

*Pelmets and end caps are available in raw aluminium on request (for painting)

11036
for side-mounted doors

11013

1086

1102

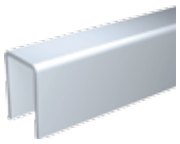
1109A/...

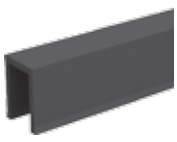
1106/110

Aluminium sliding system for interior applications, easy to install, with a top quality finish.

- AESTHETIC: the clip-on pelmet entirely hides the system
- SILENT: our new rollers have been designed and tested to offer and guarantee an unequaled rolling comfort
- CLEVER: Rollers equipped with a ball joint that improves the robustness of the system and adjusts to any mounting location defects

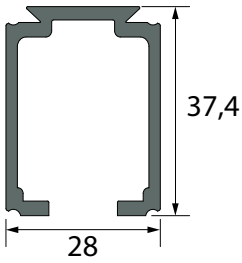

Track SAF120 (11312)
(2 - 3 m)

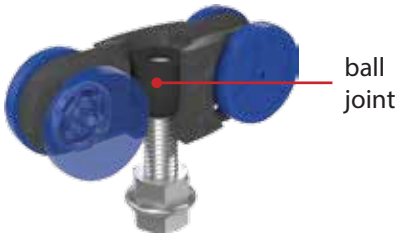

CLEVER:
Rollers equipped with a ball joint that improves the robustness of the system and adjusts to any mounting location defects

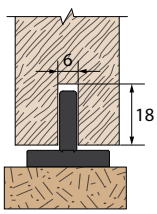

Guide 1103R

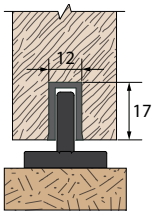

Guide 1103R using
U profile 1106/110

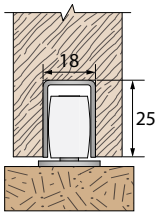

Guide 1102 using
U profile 1109A

SAF 120A

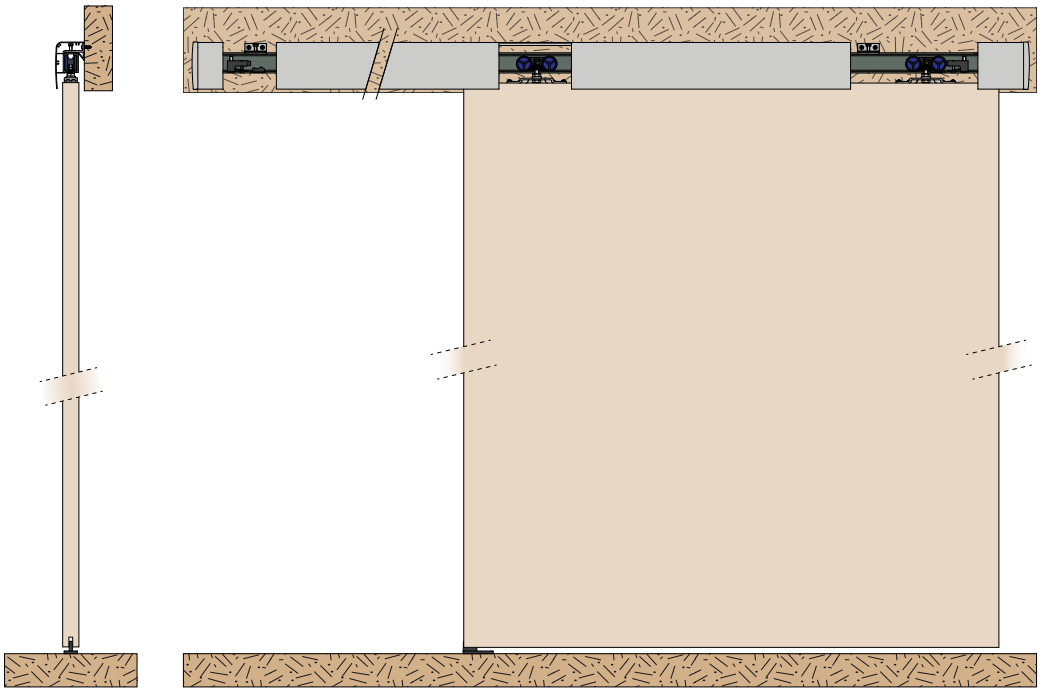

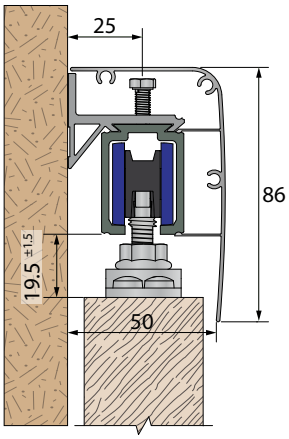

Fixing to the wall
with a plate 10036

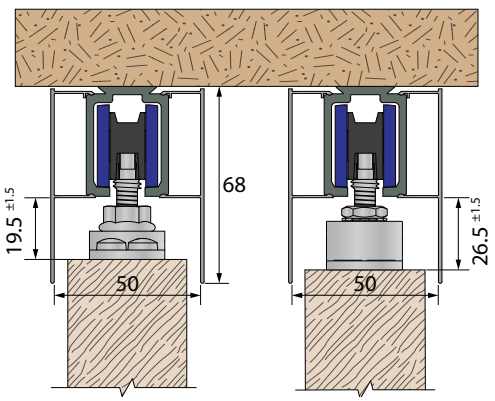

Fixing on the
ceiling with a
plate 10036

Fixing on the
ceiling with a
plate 11036

Telescopic sliding system for 2 wooden doors

SAF 80 TELESCOPIC
SAF 120 TELESCOPIC

durability D corrosion C friction F 2 6 3* 100 000 cycles

CAPACITY/DOOR	80 KG (SAF80 TELESCOPIC) 120 KG (SAF120 TELESCOPIC)
TRACK	ALUMINIUM
MOVEMENT	STRAIGHT

Essential elements required for a telescopic sliding system: 2 tracks + 1 set SAF TELESCOPIC + 1 cog belt

TRACKS AND BELT

Item Nr.	Description
11108/400	Anodized aluminium track, 33 x 27 mm cross-section, drilled every 0.44 m, in length of 4 m. for maximum opening of 2.5 m. For SAF80-TL2 and SAF81-TL2 sets
11108/500	Ditto in length of 5 m. for maximum opening of 3 m.
11312/400	Anodized aluminium track, 37.4 x 28 mm cross-section, drilled every 0.30 m, in length of 4 m. for maximum opening of 2.5 m. For SAF120-TL2 and SAF121-TL2 sets
11312/500	Ditto in length of 5 m. for maximum opening of 3 m.
1109A/200	25x18 aluminium U-profile to be flush-mounted under the doors, in length of 2 m. Optional, improves door sliding performance.
1109A/300	Ditto in length of 3 m.
10172/500	Cog belt (reinforced), in length of 5 m.

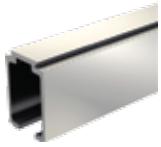

11108 & 11312

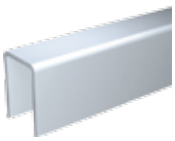

1109A

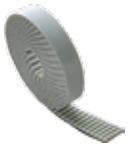

10172

SAF TELESCOPIC SETS

SAF TELESCOPIC set contents

1 roller kit:
- 4 rollers mounted on ball bearings, stainless steel pins and screws
- 4 plates (to be screwed on edge or flush-mounted)
- 2 aluminium return pulleys mounted on stainless steel plate
- 2 claw stops with stainless steel screws

1 synchronisation kit:
- 1 fixed point bracket, 2 brace plates, stainless steel
- 1 driving bracket, 2 brace plates, stainless steel

1 guiding kit:
- White plastic adjustable runner (14 to 30 mm) with screw and S6 dowel
- 1 guide with nylon olives on stainless steel bracket

SAF80 TELESCOPIC - panel thickness 38-40 mm

SAF80-TL2	Set for 2 doors up to 80 kg and maximum opening of 3 m. with stainless steel plates to be screwed on edge*
SAF81-TL2	Set for 2 doors up to 80 kg and maximum opening of 3 m. with galvanised plates to be flush-mounted

SAF120 TELESCOPIC - panel thickness 45 mm

SAF120-TL2	Set for 2 doors up to 120 kg and maximum opening of 3 m. with stainless steel plates to be screwed on edge*
SAF121-TL2	Set for 2 doors up to 120 kg and maximum opening of 3 m. with galvanised plates to be flush-mounted

* this plate requires the panels to be inserted from the end

ROLLERS KIT

Return pulley

Door stop

Roller

Plate to be screwed

OR

Plate to be flush-mounted

+

SYNCHRONISATION KIT

Driving bracket with 2 brace plates

Fixed point with 2 brace plates

+

GUIDING KIT

White plastic adjustable runner

2-olive guide on bracket

Synchronised system up to 2 panels.

- Allows for openings up to 3 m wide.
- Seamless finish:
  - no floor guide rail
  - doors stored in a stacking bay
- High-end system:
  - hangers guaranteed for 100,000 cycles
  - reinforced pulley/belt-operated synchronisation

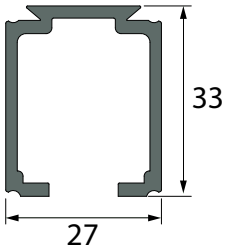

Track SAF80 (11108)
(4 - 5 m)

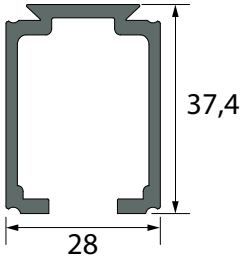

Track SAF120 (11312)
(4 - 5 m)

SAF 80 TELESCOPIC® 38-40 mm

(example of plate to be screwed on edge - panel thickness 38 mm)

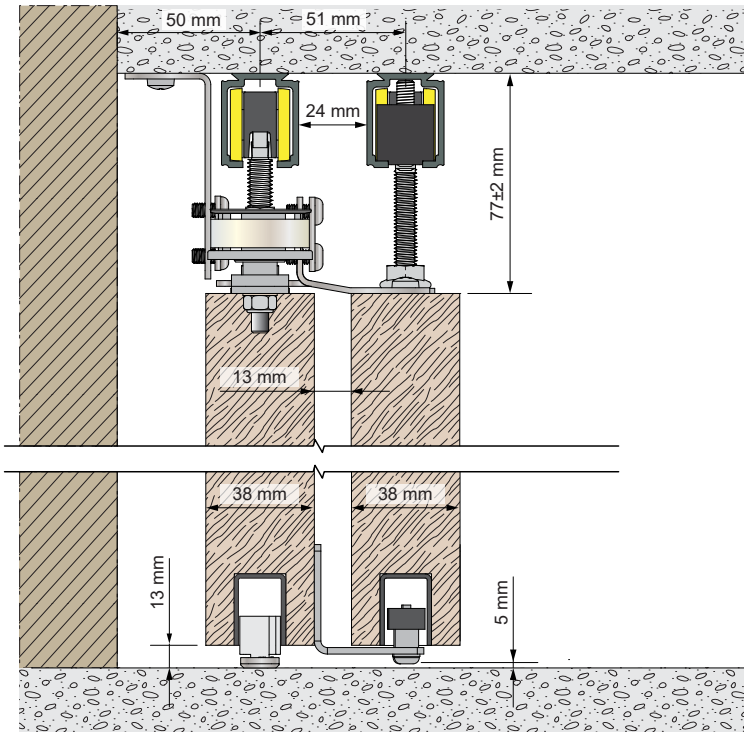

SAF 120 TELESCOPIC® 45 mm

(example of plate to be flush-mounted - panel thickness 45 mm)

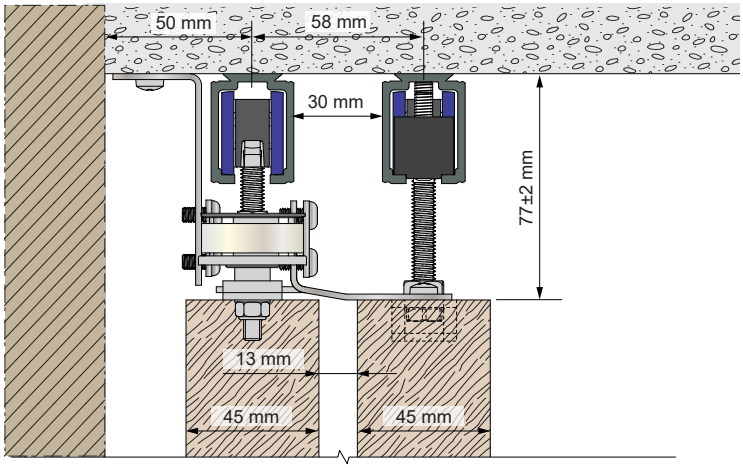

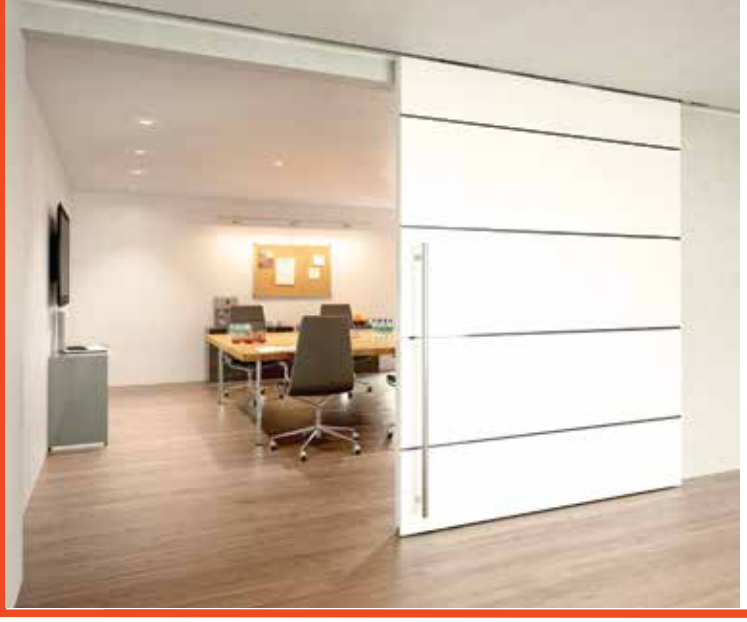

Straight sliding system for heavy wooden doors

STARAL PLUS

CAPACITY/DOOR	200 KG (TRACK 10400) 400 KG (TRACK 10500)
TRACK	ALUMINIUM
MOVEMENT	STRAIGHT

TRACKS AND ACCESSORIES

200 KG	400 KG	Fig.	Description
10400/400	10500/400	1	Raw aluminium track in length of 4 m.
10400/500	10500/500		Ditto. Length: 5 m.
10400/600	10500/600		Ditto. Length: 6 m.
10400A/600	10500A/600		Anodized aluminium track in length of 6 m.
10043	10053	2	Sliding angle plate for wall-fixing.
10043 M	10053 M	3	Sliding jointing bracket for wall-fixing.
10044	10054	4	Sliding bracket for top-fixing.
10044 M	10054 M	5	Sliding jointing bracket for top-fixing.
GH10430BP	GJ10530BP	6	Set of 4 fastening clips for pelmet.
GH10430P	GJ10530P	7	Raw aluminium pelmet in length of 6 m.
GH10430EN	GJ10530EN	8	Set of end caps for pelmet in black plastic.

FOR DOORS UP TO 200 KG — track 10400

Item Nr.	Fig.	Description	
9242NC	9	Roller with bracket to be screwed, fitted with 4 nylon wheels mounted on ball bearing top fixing	2
9242NC2	10	Roller with stainless steel framing and nylon wheels mounted on ball bearing top fixing Ø M10. To be used with plates 0036 or adjustable apron 0031.	2
0036	11	Screwing plate, top-fixing Ø M10 - 100 x 25 - Thickness: 25/10	
0031	12	Adjustable apron set for 25 to 35 mm panels.	
9149-1	14	Stop.	8

FOR DOORS UP TO 400 KG — track 10500

9252NC	9	Roller with bracket to be screwed, fitted with 4 nylon wheels mounted on ball bearing top fixing.	2
9252NC2	10	Roller with stainless steel framing and nylon wheels mounted on ball bearing top fixing Ø M12. To be used with plates 0056 / 0055 or adjustable apron 0051.	2
0056	11	Screwing plate, top-fixing Ø M12 - 170 x 30 - Thickness: 40/10	
0051	12	Adjustable apron set for 40 to 50 mm panels.	
0055	13	Welding plate, top-fixing Ø13 - 90 x 35 x 20 - Thicknes: 50/10	
9159-1	14	Stop.	2

BOTTOM GUIDE

1110/200	15	U profile 30x 30 mm in ZM 200 (magnesium zinc) - Length: 2 m.	
1110/300	15	Ditto. Length: 3 m.	
1110/600	15	Ditto. Length: 6 m.	
1110 GDL	16	Nylon guide for U-PROFILE 30 x 30 - 100 x 25 x 25 mm	

1

2

3

4

5

6

7

8

9

10

11

12

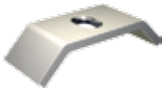
13

14

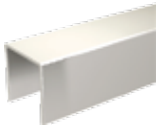
15

16

Straight sliding system with aluminium track for heavy wooden doors.

- NOISELESS: rollers fitted with nylon wheels mounted on ball bearing
- AESTHETIC: rollers 9242NC - 9242NC2 - 9252NC and 9252NC2 have been designed to reduce the gap between the top of the door and the bottom of the track
- ROBUSTNESS: rollers 9242NC2 and 9252NC2 are equiped with stainless steel framing

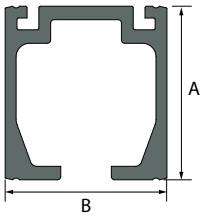

Item Nr.	A	B
10400	51.5	47.5
10500	72	64.5

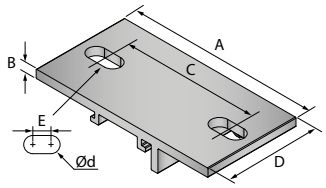

Item Nr.	A	B	C	D	E	Ød
10044 (track 10400)	127	6	91	65	12	12
10054 (track 10500)	158	8	116	90	10	16

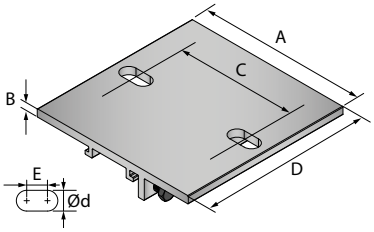

Item Nr.	A	B	C	D	E	Ød
10044 M (track 10400)	127	6	91	130	12	12
10054 M (track 10500)	180	8	116	158	10	16

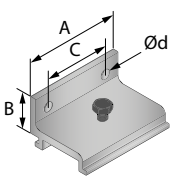

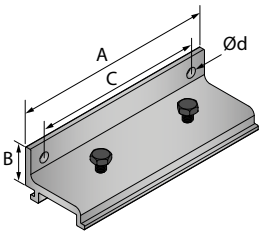

Item Nr.	A	B	C	Ød
10043 (track 10400)	65	24	45	6.5
10043 M (track 10400)	130	24	110	6.5
10053 (track 10500)	90	30	70	8.5
10053 M (track 10500)	180	30	160	8.5

STARAL PLUS

9242NC - 9252NC

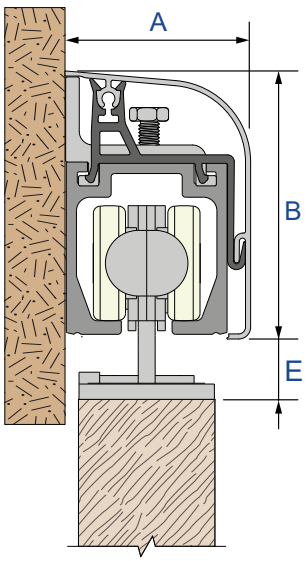

Track	A	B	E
10400	54.5	78.5	20
10500	71	105	24

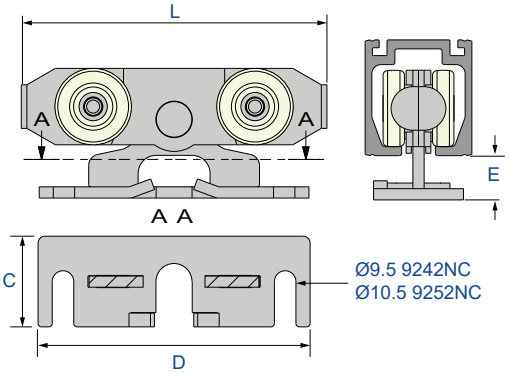

Item Nr.	L	E	C	D
9242NC	136	20	40	120
9252NC	156	24	50	142

9242NC2 - 9252NC2

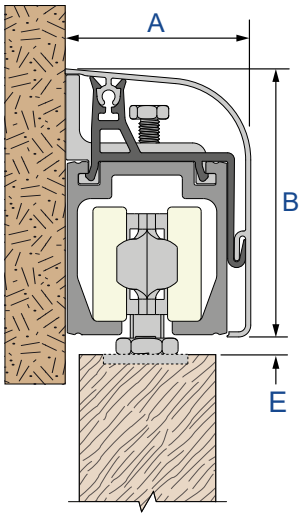

Example with embeded plate

Track	A	B	E
10400	54.5	78.5	6 min
10500	71	105	7 min

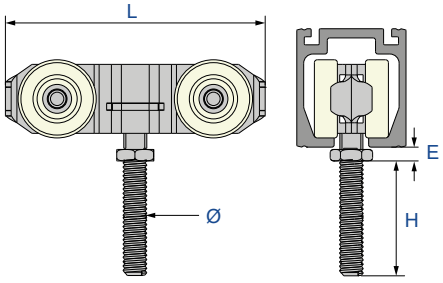

Item Nr.	L	E	H	Ø
9242NC2	113	6 min	53	M10
9252NC2	140	7 min	43	M12

Self closing sliding system for glass doors

SOFTCLOSE-GLASS

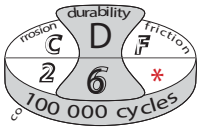

*Operated sliding systems not concerned by the standard EN 1527

CAPACITY/DOOR	80 KG
DOOR THICKNESS	8 - 10 MM
TRACK	ALUMINIUM
MOVEMENT	STRAIGHT

READY-TO-INSTALL SET - THICKNESS 8 MM

Item Nr.	Description

Set includes:
- 1 anodised aluminium track
- 1 anodised aluminium track pelmet with 2 ends caps and 2 pelmet brackets
- 2 anodised aluminium clamps*
- 2 rollers with ball bearings mounted on plates
- 1 clamp covering (2 clamp pelmets and 2 end pieces (anodised effect))
- 1 hydraulic brake
- 1 rack
- 1 door closing device (spiral spring)
- 2 stops
- 1 lower guide
- Installation instructions and tools

SC-70GA8	For opening of 0.65 m to 0.70 m
SC-80GA8	For opening of 0.75 m to 0.80 m
SC-90GA8	For opening of 0.85 m to 0.90 m
SC-100GA8	For opening of 0.95 m to 1.0 m
SC-145GA8	For opening of 1.40 m to 1.45 m

*Clamp is suitable for Securit glass and does not require any drilling of the glass panel.

READY-TO-INSTALL SET - THICKNESS 10 MM

Set includes:
Ditto 8 mm set

SC-70GA10	For opening of 0.65 m to 0.70 m
SC-80GA10	For opening of 0.75 m to 0.80 m
SC-90GA10	For opening of 0.85 m to 0.90 m
SC-100GA10	For opening of 0.95 m to 1.0 m

OPTION CLOSING

3012CSC	Additionnal rack (L = 570 mm) allowing to increase the closing timing (for kit SC-145GA8 use 2 racks).
SC-TR	Timer on the right side: the door stays opened until 60 seconds before closing
SC-TL	Ditto for the left side

SET CONTENTS

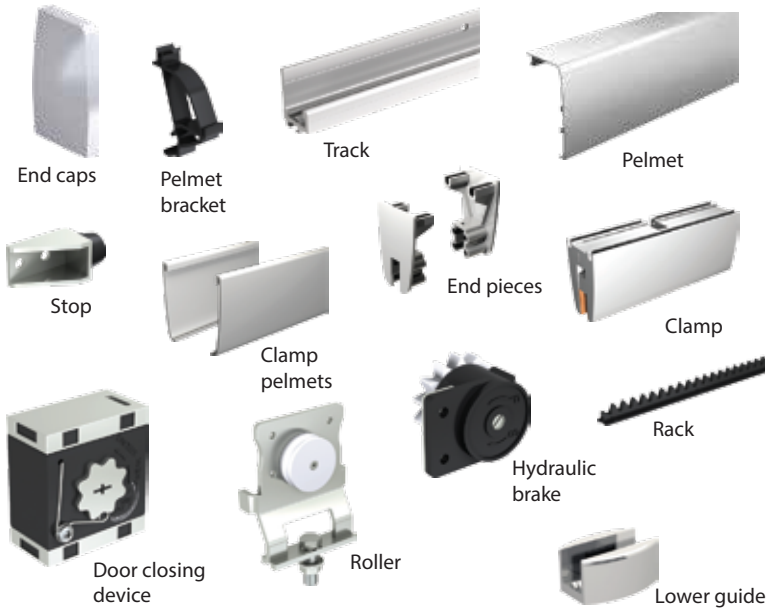

SC-T

Self closing sliding system designed for aeras that must stay closed. Suitable for doors of 8 and 10 mm thickness.

- PRACTICAL: 5 kits ready to fit for widths of openings from 650 to 1450 mm
- SILENT: Integrated hydraulic brake for a soft and silent closing
- CONFORTABLE: Adjustable closing speed
- DESIGN: Perfect finish with anodized aluminium pelmet (with returns)
- Clamp is suitable for Securit glass and does not require any drilling of the glass panel

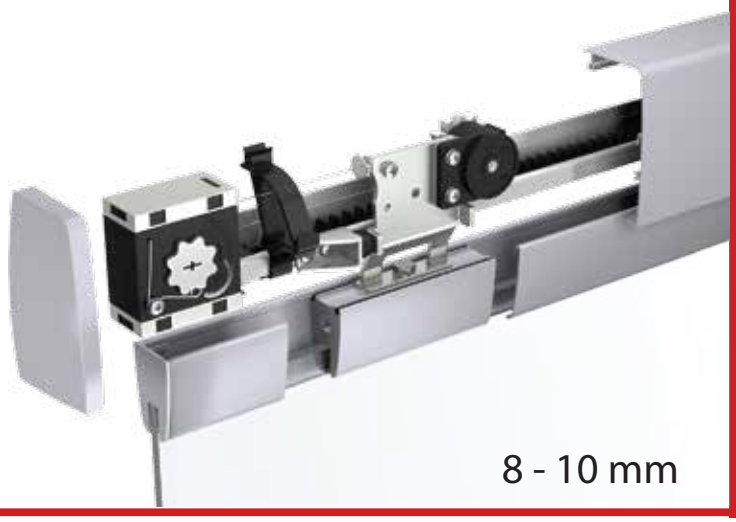

SOFTCLOSE-GLASS®

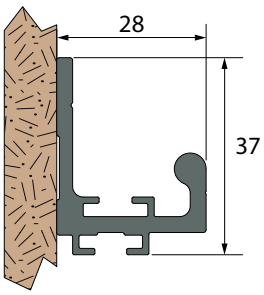

Track SOFTCLOSE-GLASS

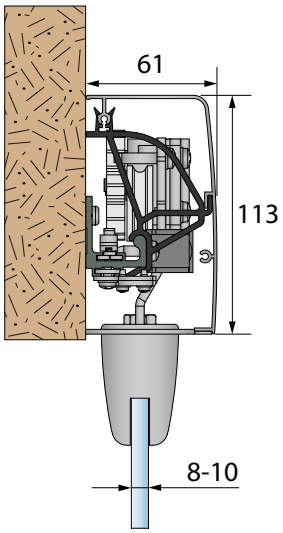

Vertical section of the system

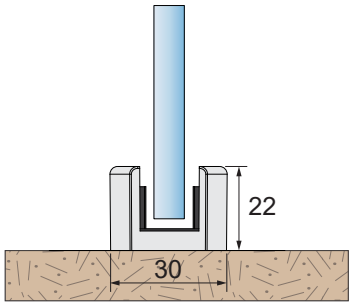

Lower guide

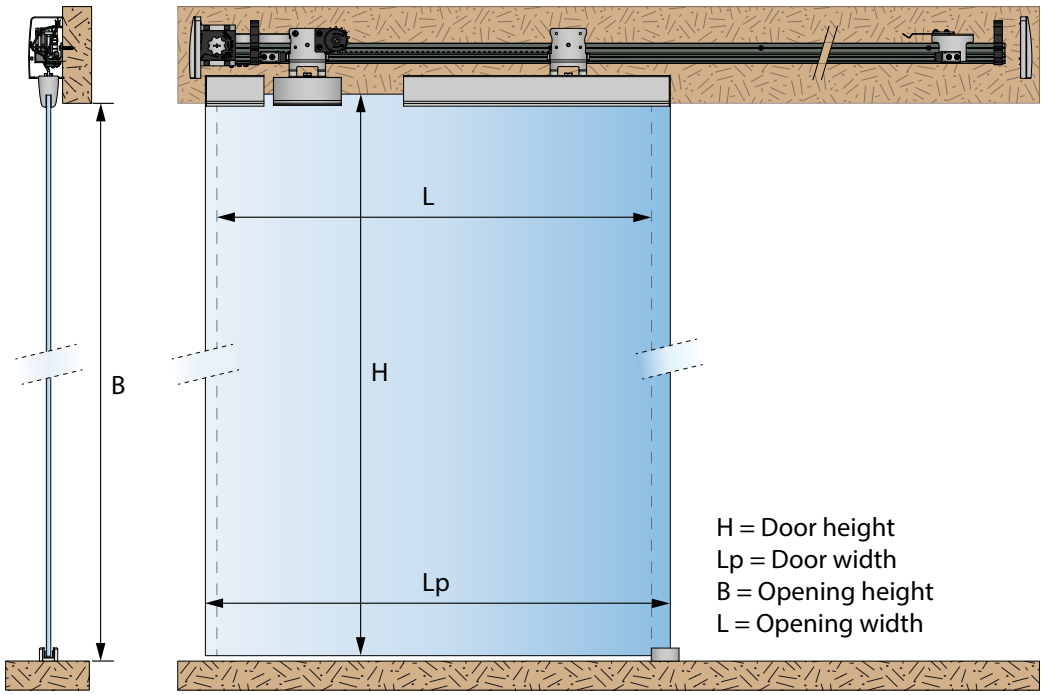

DIMENSIONS:

KIT 8 mm	KIT 10 mm	Opening width (L)	Door width (Lp)	Door height (H)
SC-70GA8	SC-70GA10	650 - 700	L + 55	B - 40
SC-80GA8	SC-80GA10	750 - 800	L + 55	B - 40
SC-90GA8	SC-90GA10	850 - 900	L + 55	B - 40
SC-100GA8	SC-100GA10	950 - 1000	L + 55	B - 40
SC-145GA8	SC-145GA10	1400 - 1450	L + 55	B - 40

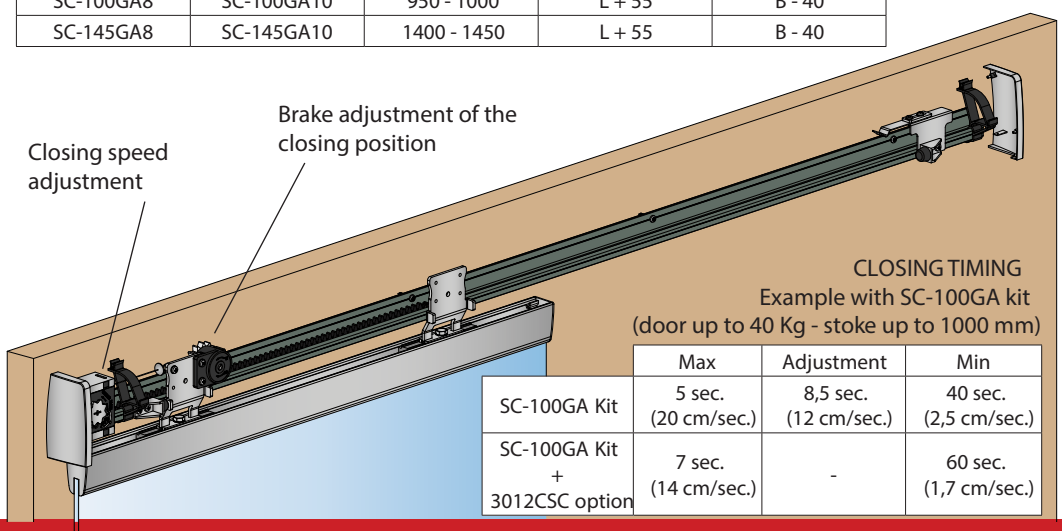

CLOSING TIMING
Example with SC-100GA kit
(door up to 40 Kg - stoke up to 1000 mm)

	Max	Adjustment	Min
SC-100GA Kit	5 sec. (20 cm/sec.)	8,5 sec. (12 cm/sec.)	40 sec. (2,5 cm/sec.)
SC-100GA Kit + 3012CSC option	7 sec. (14 cm/sec.)	-	60 sec. (1,7 cm/sec.)

Sliding-folding system for wooden doors

TANGO

CAPACITY/PANEL	40 kg
TRACK	ALUMINIUM (SAF)
MOVEMENT	SLIDING / FOLDING

SETS

Item Nr.	Description	
TANGO40-120	Set for 2 panels including: - 1 aluminium track of 1.20 m (SAF) - 1 SAF roller (ball bearings) with plate - 1 upper pivot - 1 lower pivot - 3 hinges1504C3 (side fixing) - Screws and mounting instructions	6
TANGO40-150	Set for 2 panels including: - 1 aluminium track of 1.50 m (SAF) - 1 SAF roller (ball bearings) with plate - 1 upper pivot - 1 lower pivot - 3 hinges1504C3 (side fixing) - Screws and mounting instructions	6
TANGO40-180	Set for 4 panels*including: - 1 aluminium track of 1.80 m (SAF) - 2 SAF rollers (ball bearings) with plate - 2 upper pivots - 2 lower pivots - 6 hinges1504C3 (side fixing) - Screws and mounting instructions	6

*NB: 2 panels on each side of the opening (2 + 2)

Upper pivot

Aluminium track

Roller

Hinge

Lower pivot

GEAR

TANGO 42	Gear to guide 2 panels. Suitable for TANGO40-120 and TANGO40-150 to add 2 panels on a 4 panels installation (2+2) Gear including: - 1 SAF roller (ball bearings) with plate - 1 upper pivot - 1 lower pivot - 3 hinges1504C3 (side fixing) - Screws and mounting instructions	10

TANGO 42

Upper pivot

Roller

Hinge

Lower pivot

ACCESSORIES

11013	Sliding angle plate for wall fixing 1angle plate required every 45 cm.	8
1504 PI	Set of 3 special hinges with ball bearings. The benefits: - Holds the panels in the closed position - Closes the gap bandween the panels This special hinge is an alternative to the hinges 1504C3 (3 hinges are required for 2 panels installations and 6 for 4 panels installations) Use our SLIDSOFT calculation software	

11013

1504 PI

Sliding-Folding system for partition doors and wardrobe doors, 2 or 2+2 panels (2 on each side of the opening)

- FLEXIBLE: for 2 or 2+2 panels
- DESIGN: no bottom track and minimum gaps
- PRACTICAL: easy to install and to operate
- For 2 panels each 750 mm maximum width
- Maximum opening of 3 m.

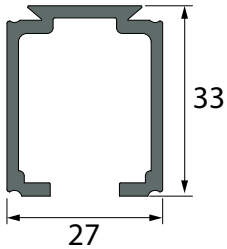

Track SAF
(1.20 - 1.50 - 1.80 m)

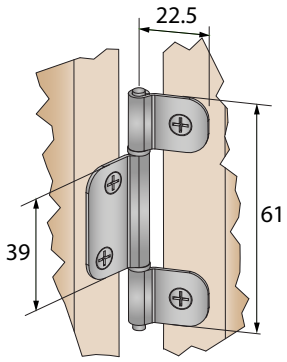

Hinge 1504C3

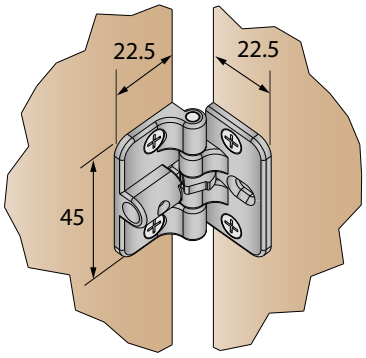

Hinge 1504PI

TANGO®

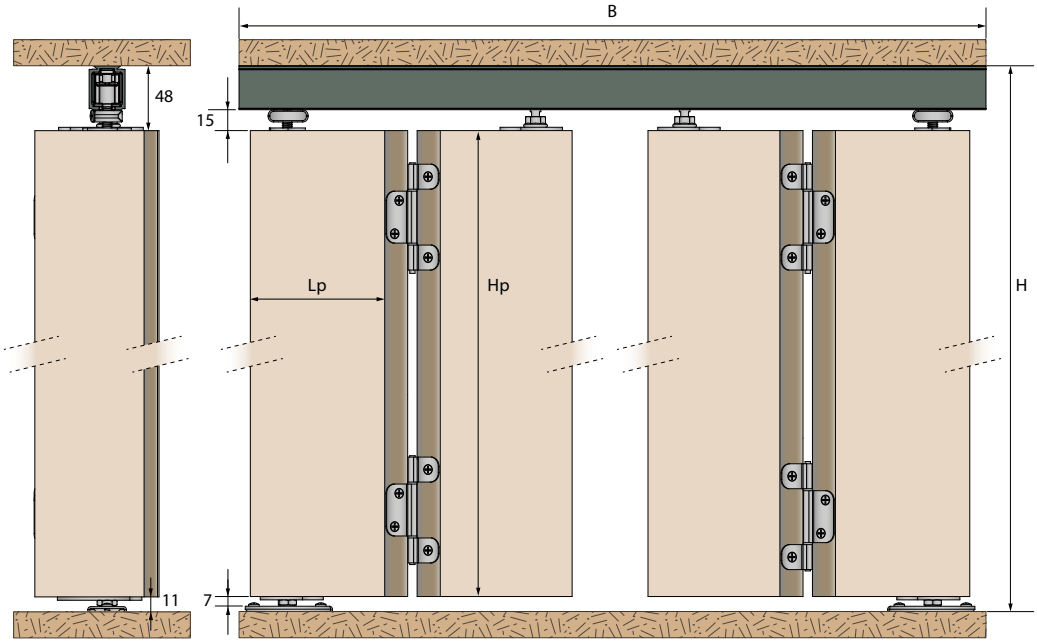

Lp: panel width (Lp max = 750 mm)
Hp: Panel height

B: opening width
H: opening height

Width of opening according to the panels dimensions:

	Configuration (No. of panels)	2 + 2	2
	Opening width	B = 4Lp + 3.6 + J	B = 2Lp + 1.2 + J
	Opening height	H = Hp + 64	

	Configuration (No. of panels)	2 + 2	2
	Opening width	B = 4Lp + 1.2 + J	B = 2Lp + J
	Opening height	H = Hp + 64	

The «J» value varies according to the panels thickness:

Ep	J
16 < Ep < 22	4
22 < Ep < 28	6
28 < Ep < 32	8
32 < Ep < 40	12

Width of panels according to the opening dimensions:

	Configuration (No. of panels)	2 + 2	2
	Panels width	$Lp = \frac{B - 3.6 - J}{4}$	$Lp = \frac{B - 1.2 - J}{2}$
	Panels height	Hp = H - 64	

	Configuration (No. of panels)	2 + 2	2
	Panels width	$B = \frac{B - 1.2 - J}{4}$	$B = \frac{B - J}{2}$
	Panels height	Hp = H - 64	

Ep	J
16 < Ep < 22	4
22 < Ep < 28	6
28 < Ep < 32	8
32 < Ep < 40	12

Folding system for glass partitions

OPENTEC F80

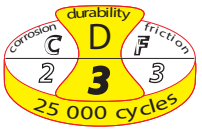

CAPACITY/PANEL	80 KG
DOOR THICKNESS	10 - 12 - 12.7 MM
MAX OPENING DIMENSIONS	9 x 3 M (6 + 6 PANELS)
TRACK	ALUMINIUM
MOVEMENT	FOLDING

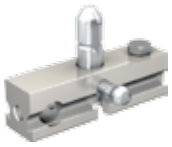

Panel lock (optional)

8-roller hanger made of 316L stainless steel

Automatic keeper to close panels (adjustable hardness)

Anodised aluminium thrust bearing hinges

Lower guide

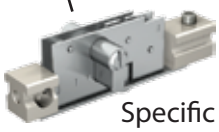

Specific Made in France lock

Folding system for glass partitions of 10, 12 or 12.7 mm thickness.
To be used as a glazed interior partition:
restaurants, hotels, shopping centres, airports, etc...

- Drilled hanging glass system that provides guaranteed stability. Reliable, secure, and easy-to-install system
- Trouble-free installation: convenient access to adjustment modules
- Designer finish pelmet installed when assembly is completed. The pelmet guarantees a perfect result and gives fitters greater flexibility when handling the panels
- Choice of structural materials: anodised aluminium and stainless steel

OPENTEC F80

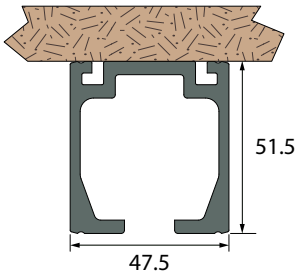

Track 10400A/...
(drilled anodised aluminium)

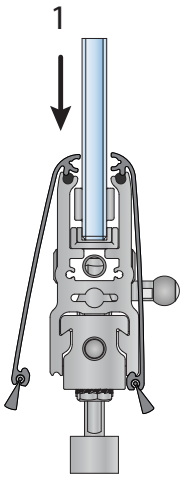

Easy mounting of the pelmet

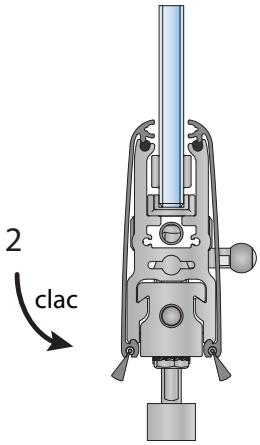

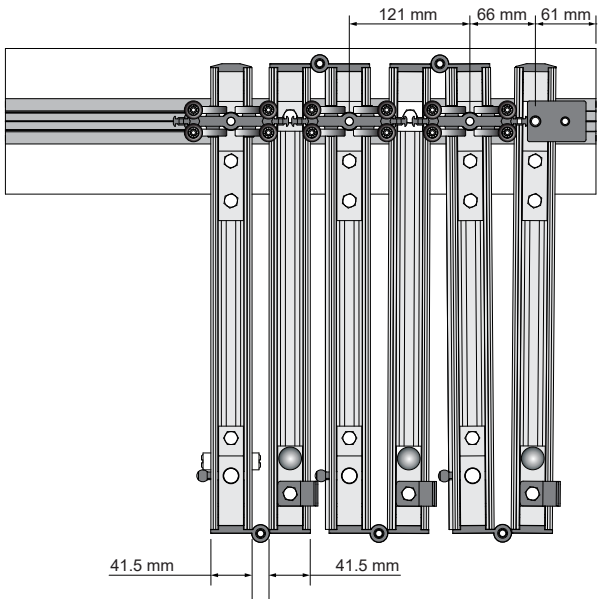

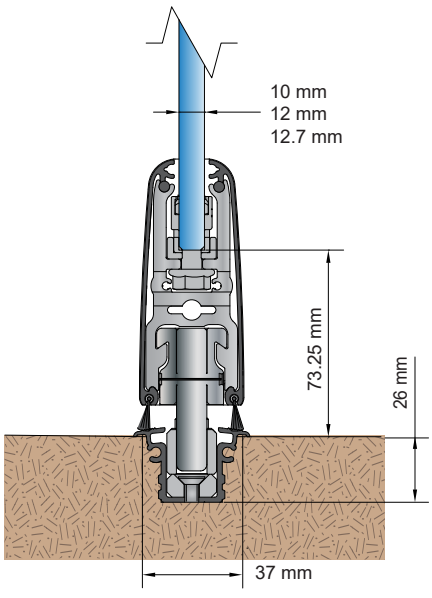

Bottom section

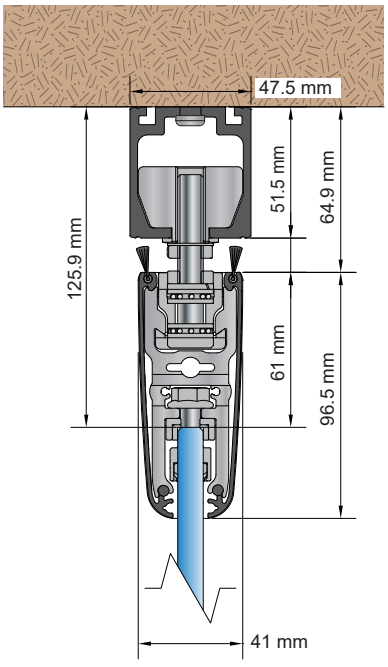

Upper section

Folding system for wood-framed picture windows (waterproof)

OPENTEC FWF100

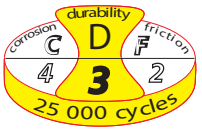

CAPACITY/PANEL	100 KG
DOOR THICKNESS	83 to 100 MM
MAX OPENING DIMENSIONS	16.5 x 3.5 M (7 + 8 PANELS)
TRACK	ALUMINIUM
MOVEMENT	FOLDING

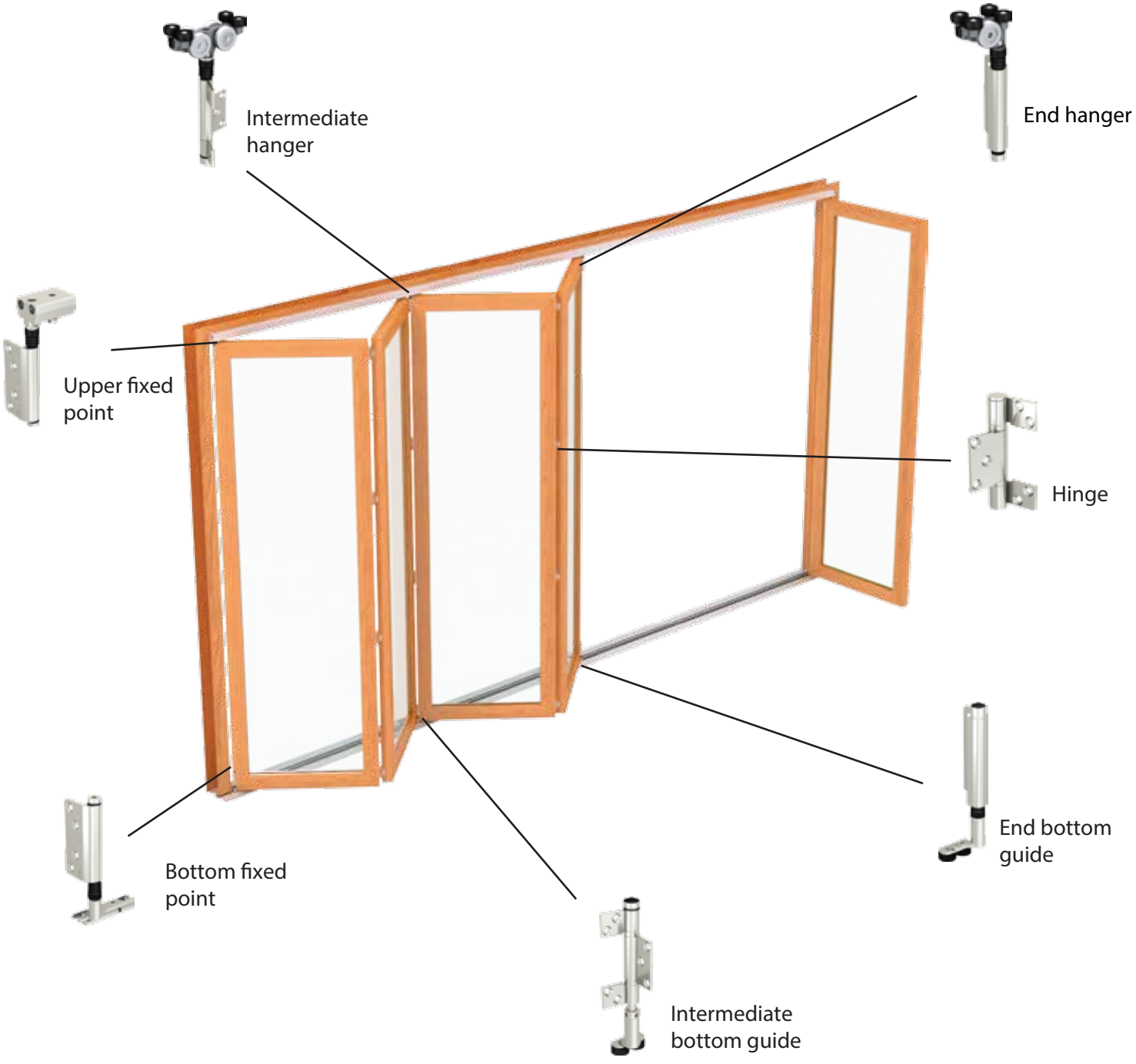

Folding system for wood-framed picture windows. For panels of 83 to 100 mm thinckness. For outside use: restaurants, bars, hotels, patios, villas, etc...

- Folding system for creating a tightly sealed wood-framed picture window
- Solution for the threshold: flush-mounted (PRM)
- Choice of structural materials: anodised aluminium and stainless steel
- 2 and 3-point locking system suitable for the product
- Standard plans for making tightly sealed leaves can be provided on request.
- Convenient to use: picture window slides easily.
- Thickness of Glass panels: 24 to 50 mm.

OPENTEC FWF100®

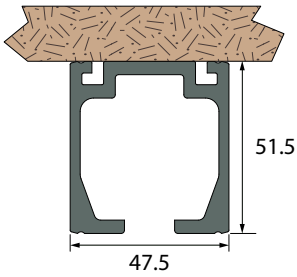

Track 10400A/...
(drilled anodised aluminium)

3-point locking system

2-point locking system

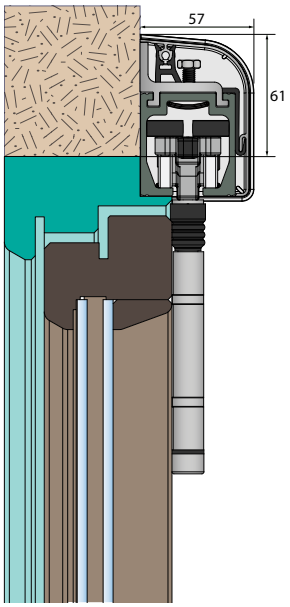

Wall mounting section

Frame
Panel
Glass

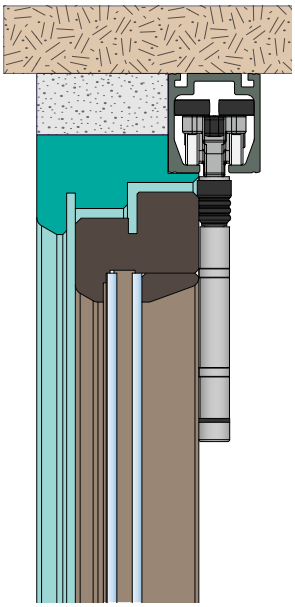

Ceiling mounting section

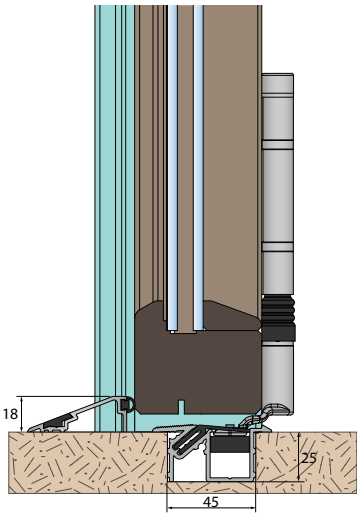

Flush-mounted threshold

Folding system for metal-framed picture windows (waterproof)

OPENTEC FMF150

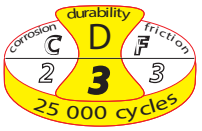

CAPACITY/PANEL	150 KG
DOOR THICKNESS	50 to 100 MM
MAX OPENING DIMENSIONS	16.5 x 3.5 M (7 + 8 PANELS)
TRACK	ALUMINIUM
MOVEMENT	FOLDING

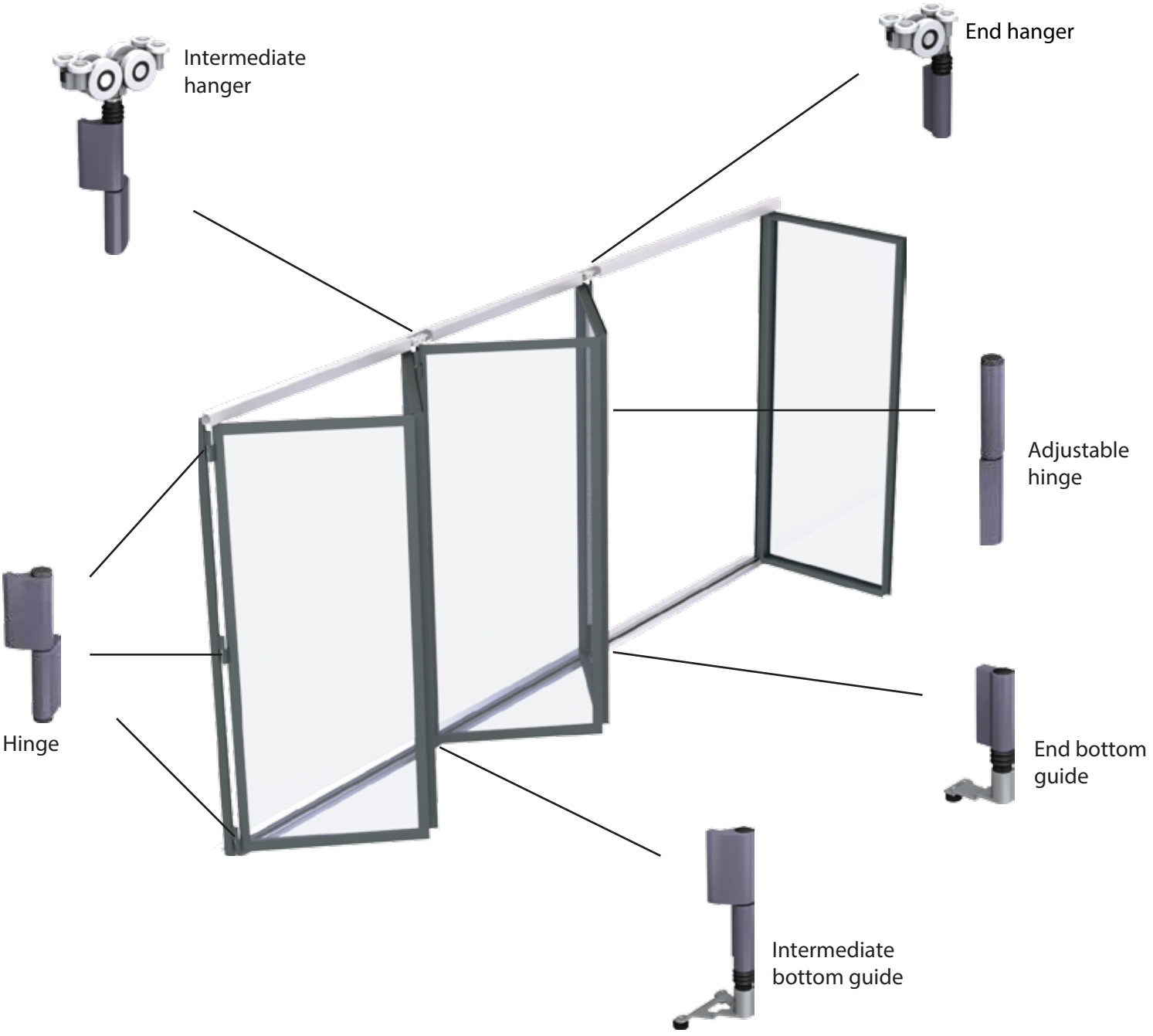

Folding system for metal-framed picture windows. For panels of 50 to 100 mm thinckness. For outside use:
Restaurants, hotels, patios, bars, shopping centres, etc...

- Folding system for creating a tightly sealed metal-framed picture window
- Solution for the threshold: flush-mounted (PRM)
- 2 and 3-point locking system suitable for the product
- Convenient to use: picture window slides easily
- Choice of structural materials: anodised aluminium and stainless steel.

OPENTEC FMF150

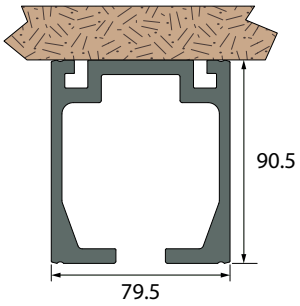

Track 10500A/...
(drilled anodised aluminium)

2 points bolt

3 -point locking system.
Available with or
without barrel.

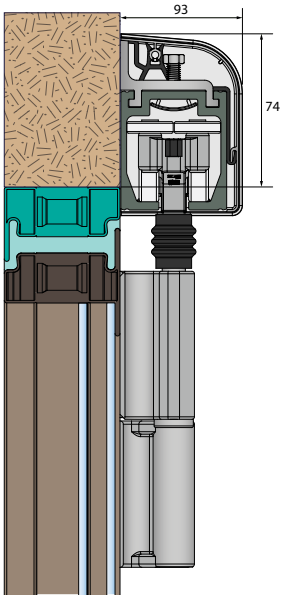

Wall mounting section

Frame
Panel
Glass

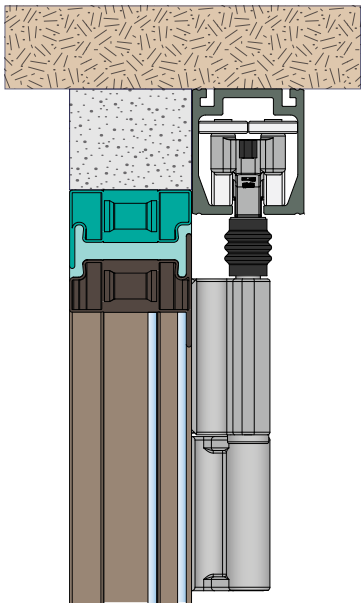

Ceiling mounting section

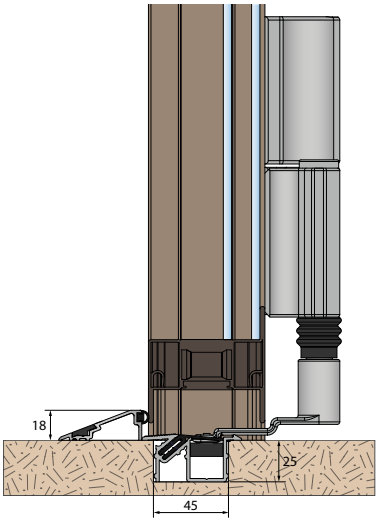

Flush-mounted threshold

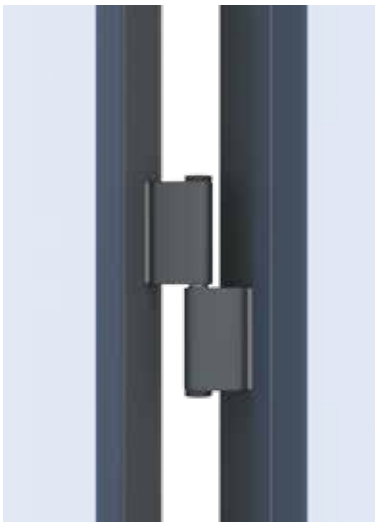

MANTION

AUB Limited
Unit A, 12/F, Hung Mou Industrial Building,
62 Hung To Road, Kwun Tong,
Kowloon, Hong Kong
Tel : +852 2375 6110
Fax : +852 2406 2602
Email : enquiry@aub.com.hk
www.aub.com.hk